BM TRADA

Global Fire Resistance Assessment

CONFIDENTIAL

Report: Chilt/A01204 Revision E
Contract: CNA/F15165
Halspan® 30 Optima Doorsets for 30 Minutes Fire Resistance
Valid From: 10th August 2015
Valid Until: 10th August 2020

Sponsor:
Halspan Ltd.
Muirhouses
Bo'ness
Edinburgh
EH51 9SS

Halspan Authorised Document
Valid Only When Submitted
With Permission Schedule

This document is confidential and remains the property of Chiltern International Fire Ltd. The legal validity of this report can only be claimed on the presentation of the complete report.

Contents

Page No.

1 Introduction ... 3
2 General Description of Construction ... 3
3 Leaf Sizes ... 3
4 Configurations ... 3
5 Leaf Size Adjustment ... 4
6 Overpanels ... 4
7 Glazing ... 6
8 Door Frames ... 10
9 Lipping Materials ... 13
10 Edge Protectors ... 14
11 Leaf Facing Materials ... 15
12 Intumescent Materials ... 17
13 Adhesives ... 18
14 Tested Hardware ... 18
15 Additional & Alternative Hardware ... 19
16 Classification of Timber ... 23
17 Door Gaps ... 23
18 Structural Opening ... 23
19 Fixings ... 23
20 Sealing to Structural Opening ... 23
21 Insulation ... 25
22 Smoke Control ... 25
23 Conclusion ... 26
24 Declaration by the Applicant ... 27
25 Limitations ... 28
26 Validity ... 28

Appendix A - Halspan® 30 Optima Steel Frame Doorsets ... 29
Appendix B - Halspan® 30 Optima Aluminium Frame Doorsets ... 31
Appendix C - 30 Minute Proprietary Glazing Systems ... 34
Appendix D - Performance Data ... 39
Appendix E - Revisions ... 40
Appendix F - PVC Edge Protectors ... 41
Appendix G - Data Sheets ... 42

Halspan Authorised Document
Valid Only When Submitted
With Permission Schedule

1 Introduction

This document constitutes a global assessment relating to Halspan® 30 **Optima**, fire resisting doorsets, for Halspan Ltd. The assessment uses established extrapolation and interpretation techniques in order to extend the scope of application by determining the limits for the design based on the tested constructions and performances obtained. The assessment is an evaluation of the potential fire resistance performance, if the elements were to be tested in accordance with BS 476: Part 22: 1987.

2 General Description of Construction

The construction for door leaves of this design comprises a solid sheet of 44mm thick Halspan® 30 **Optima** three layered particleboard (nominal density 620kg/m³ ±10%). Where specified, the leaves are lipped with hardwood.

3 Leaf Sizes

The approval for increased leaf dimensions is based on the tests listed in Appendix D and takes into account the margin of over-performance above 30 minutes integrity for the design and the characteristics exhibited during test. Data sheets specifying the maximum approved leaf sizes and graphs showing the permitted gradient between maximum height and width are contained in Appendix G.

Doorsets with reduced dimensions are deemed to be less onerous. Therefore, doors with dimensions that are less than those tested and stated in Appendix G may be manufactured.

4 Configurations

Based on the test evidence listed in Appendix D, this assessment covers the following doorset configurations:

Abbreviation	Description
LSASD & ULSASD	Latched & unlatched, single acting, single doorset
DASD	Double acting, single doorset
LSASD+OP & ULSASD+OP	Latched & unlatched, single acting, single doorset + overpanel
DASD + OP	Double acting, single doorset + overpanel
LSADD & ULSADD	Latched & unlatched, single acting, double doorset
DADD	Double acting, double doorset
LSADD+OP & ULSADD+OP	Latched & unlatched, single acting, double doorset + overpanel
DADD + OP	Double acting, double doorset + overpanel

Unequal leaf double doorsets are covered by this assessment with no restriction on the smaller leaf dimension.

Halspan Authorised Document
Valid Only When Submitted
With Permission Schedule

5 Leaf Size Adjustment

Halspan® 30 **Optima** door leaves may be altered as follows:

Element	Reduction
Leaf	The manufactured size of the leaf may be reduced in height or width without restriction
Lipping	The dimensions stated in section 9.1 may be reduced by 20% for fitting purposes

6 Overpanels

6.1 Solid

Overpanels of the same construction as the door leaves may be used either flush with the leaf heads or when separated by a transom. In either case the overpanel must be fully contained within the door frame (see following diagram).

If a transom is required to separate the leaf heads from the overpanel, it must be to the same specification as the door frame (see the note under the table in section 8.1).

Door frame joints must utilise one of the following four methods: mortise and tenon joints; half lapped joints; mitre joints; butt joints (see section 8.2).

All methods require joints to be tight, with no gaps, and require mechanical fixing with the appropriate size ring shank nails or screws. Butt joints must be additionally bonded with urea formaldehyde or equivalent.

Overpanels must be fixed by either:

- screwing through the rear of the frame with steel screws passing at least 30mm into the centre line of the overpanel. Fixings must be no more than 100mm from each corner and a maximum of 250mm centres in between; or
- using 75mm long x 8mm diameter steel dowels fitted centrally in the frame reveal across the head of the overpanel no closer than 150mm from each corner of the overpanel and the remainder equispaced at a maximum of 450mm centres. A minimum of four dowels must be used. A further 75mm long screw fixing is required to be inserted at an angle through the bottom corners of the overpanel into the door frame.

The intumescent seals specified for the jambs in Appendix G may be fitted in the overpanel edges or frame reveal, if required for the manufacturing process. Providing the intumescent seals are fitted to all edges of the overpanel, the frame to overpanel junction is permitted to have a maximum 2mm gap tolerance.

However, it is not mandatory to fit intumescent seals to the edges of the overpanel for a compliant doorset providing the frame to overpanel junction is tight with no gaps.

It is permitted to include a glazed aperture within the overpanel providing the glazing is within the parameters given in section 7.

Maximum overpanel heights are as follows:

Configuration	**Max. Overpanel Height** (mm)
Single doorsets	2000
Double doorsets	1500

Halspan Authorised Document
Valid only when Submitted
With Permission Schedule

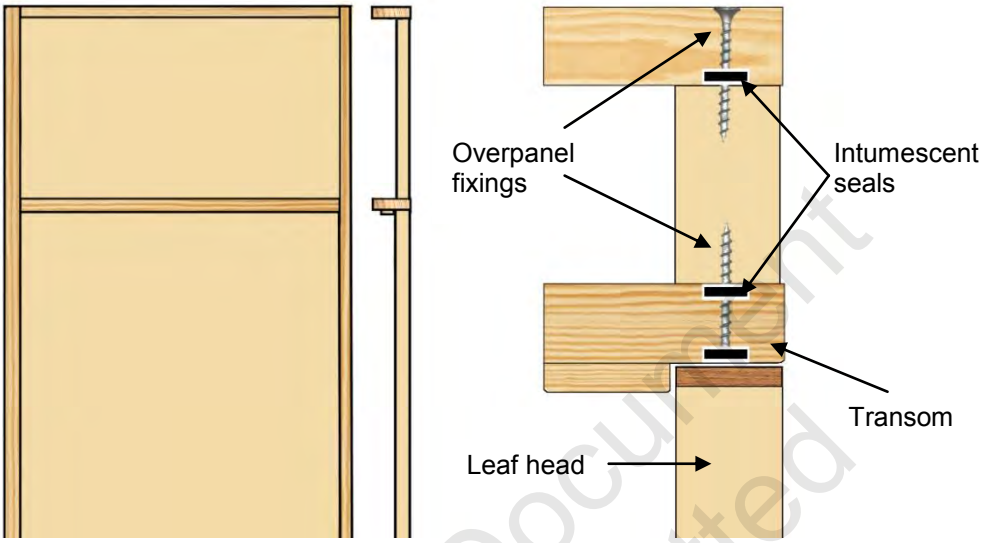

Note: Drawing is representative of doorset construction only; actual construction must be as the text within this document specifies.

6.2 Fanlights

Timber frame doorsets including a transom may include a glazed fanlight. The timber frame and glazing beads must be hardwood with a minimum density of 640kg/m^3, whilst the frame section for the transom must be a minimum of 70mm x 44mm. All other elements of timber door frame and transom construction must comply with the specification contained in section 8.

The maximum assessed fanlight dimensions are detailed in the table below, subject to the following restriction:

- The glazing system and glass must be able to demonstrate adequate performance when tested as a window or screen in accordance with BS 476: Part 22: 1987 or BS EN 1634-1, at the pane dimensions to be installed.

Configuration	**Height** (mm)	**Width** (mm)
Single & double doorsets	≤600	Overall door width

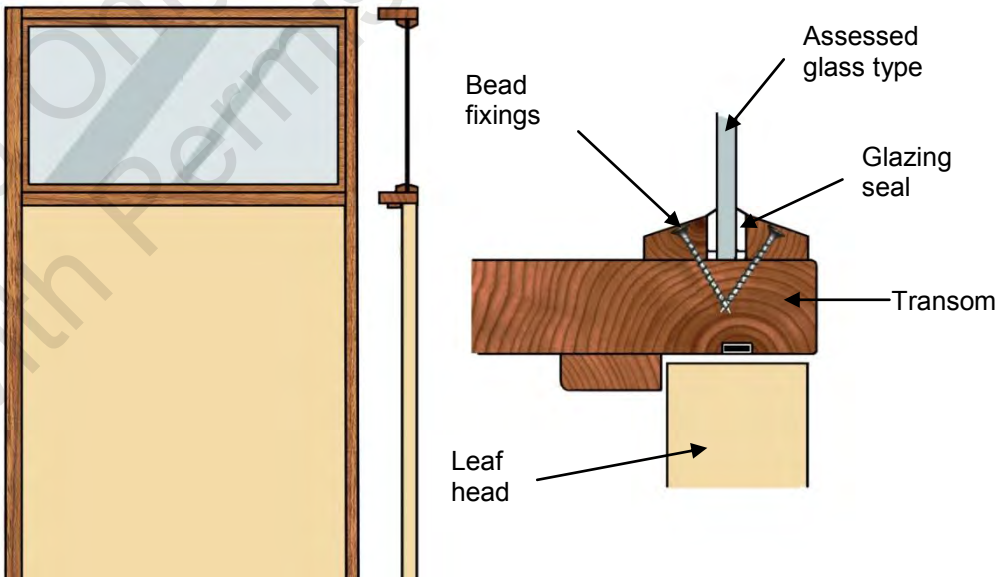

Note: Drawing is representative of doorset construction only, actual construction must be as the text within this document specifies.

Halspan Authorised Document
Valid Only When Submitted
With Permission Schedule

7 Glazing

7.1 General

The testing conducted on Halspan® 30 **Optima** has demonstrated that the design is capable of tolerating relatively large glazed apertures, whilst providing a margin of over-performance. Glazing is therefore acceptable within the following parameters:

The maximum assessed glazed area for all configurations is 1.75m². The glazing system must be one of the following tested proprietary systems:

7.2 Assessed Glazing Systems

The glazing system must be one of the following proprietary tested systems:

Glazing System	Manufacturer	Max. Area (m^2)
1. Fireglaze 30	Sealmaster Ltd.	1.75
2. Therm-A-Strip	Intumescent Seals Ltd.	1.75
3. Firestrip 30	Hodgsons Sealants Ltd.	1.75
4. Flexible Figure 1	Lorient Polyproducts Ltd.	1.75
5. System 36 Plus	Lorient Polyproducts Ltd.	1.25
6. Pyroglaze 30	Mann McGowan Ltd.	1.25
7. 8193	Pyroplex Ltd.	1.25
8. 30049	Pyroplex Ltd.	1.25
9. Halspan 30	Halspan Ltd.	1.25

7.3 Assessed Glass Products

Assessed glass types are as follows:

Glass Type	Manufacturer	Max. Area (m^2)
1. 6 & 7mm Pyroshield	Pilkington Group Ltd.	1.75
2. 6 & 7mm Pyroshield 2	Pilkington Group Ltd.	1.75
3. 6mm Pyran S	Schott Glass Ltd.	1.75
4. 6mm Firelite glass (see note 2)	Southern Ceramic Supplies	0.5
5. 6mm Sureglaze clear	Halspan Ltd.	0.8
6. 6mm Sureglaze wired	Halspan Ltd.	0.8
7. 6mm Interglaze E30	Halspan Ltd.	1.25
8. 6mm Pyrostem	Pyroguard UK Ltd.	1.25
9. 6mm Pyrocet XPT (see note 3)	Securiglass Ltd.	0.2
10. 6mm Pyroswiss (see note 4)	Vetrotech Saint Gobain	0.8
11. 6mm Pyrotech 630 (see note 5)	Essex Safety Glass Ltd.	1.25
12. 7mm Pyroguard EW 30	Pyroguard UK Ltd.	1.25
13. 7mm Sureglaze insul	Halspan Ltd.	0.8
14. 7mm Pyrobelite 7	AGC Flat Glass Europe	1.75
15. 7mm Pyrodur 30-104	Pilkington Group Ltd.	1.75
16. 10mm Pyrodur 60-10	Pilkington Group Ltd.	1.75
17. 11mm Pyroguard EW MAXI	Pyroguard UK Ltd.	1.25
18. 11mm Pyranova 15-S2.0	Schott UK Ltd.	1.75
19. 12mm Pyrobelite 12	AGC Flat Glass Europe	1.75
20. 15mm Pyroguard EI 30	Pyroguard UK Ltd.	1.75

Halspan Authorised Document Valid Only When Submitted With Permission Schedule

21. 15mm Pyrostop 30-10	Pilkington Group Ltd.	1.75
22. 16mm Pyrobel 16	AGC Flat Glass Europe	1.75

Notes:

1. All glass types must be fitted fully in accordance with the manufacturers' tested details/installation requirements, particularly with respect to edge cover and expansion tolerances.
2. In accordance with the requirements of Approved Document N: Glazing – safety in relation to impact, opening and cleaning, panes of Firelite glass are limited to a smaller dimension not exceeding 250mm in height or width and an area not exceeding 0.5m^2 (see Approved Document N for details).
3. 6mm Pyrocet may only be used with the Zeroplus Slimport Glazing System – see section 7.6.
4. Based on test RF02110 6mm Pyroswiss manufactured by Vetrotech may only be used with glazing system 3 (Firestrip 30) listed in section 7.2.
5. Based on test RF08169 6mm Pyrotech 630 manufactured by Essex Safety Glass Ltd may only be used with the tested glazing system depicted in Appendix C.
6. Glass types 18-22 are fully insulating for 30 minutes in terms of the criteria set out BS 476: Part 20: 1987.

7.4 Glazing Beads & Installation

Glazing beads must be as specified in the following table:

Material	**Profile**	**Permitted Glazing System** (section 7.2)	**Permitted Glass Type** (section 7.3)	**Min. Density** (kg/m^3)
Hardwood	Chamfer	1 - 9	1 - 22	640
	Square	2	1 - 8 & 12 - 22	640
		1 - 9	14 - 22	640
MDF	Chamfer	1 - 4	1 – 22	700
	Square	1 - 4	14 – 22	700

Sectional drawings detailing the tested and approved proprietary glazing systems are contained in Appendix C.

See Appendix C for square and splayed bead profile options. A 6 – 10mm thick square aperture liner is permitted for use with square beads providing it is constructed from hardwood of minimum density 640kg/m^3 and glued in position using a UF, PVA or PU type adhesive.

Glazing beads must be retained in position with 40mm long steel pins or 40mm long No. 6-8 screws, inserted at 35-40º to the vertical. Fixings must be at 150mm maximum centres and no more than 50mm from each corner. Pneumatically fired pins are acceptable providing the pins meet the specification given in section 7.5 below.

Glazed openings must not be less than 90mm from any door edge. Multiple apertures are acceptable within the permitted glazed area, with a minimum dimension of 80mm of Halspan® 30 **Optima** core between apertures. Alternatively, the dimension may be reduced to 20mm using the Halspan® 30 multipane glazing system by inserting 44mm x 20mm hardwood transoms/mullions dividing the apertures (see Appendix C for details).

Aperture shape is not restricted, providing the glazing system and beads can effectively accommodate the required profile.

False timber beads may be bonded to the glass face with an intumescent mastic/silicon, or a 0.5-2mm thick self-adhesive intumescent tape/strip. Suitable glass

Halspan Authorised Document
Valid Only When Submitted
With Permission Schedule

for this application is restricted to types 14-22. Alternatively, false timber beads may be applied to the glass face using the Halspan® Cassette system shown in Appendix C.

Glazing beads may be clad with 2mm thick PVC provided that the Fireglaze 30 system is used (system 1 in section 7.2) with a 39° chamfer to the top face of the hardwood bead.

Timber for glazing beads must be straight grained joinery quality, free from knots, splits and checks.

7.5 Gun (Pneumatically) Fired Pins

The following pin specification is permitted and has been considered suitable for gun (pneumatically) fired applications:

7.5.1 Option 1 – Round, Oval & Rectangular Pins

The following dimension of pin has been approved for round, oval and rectangular shaped pins:

- Minimum Standard Wire Gauge (SWG) 16.
- Minimum cross section area of 2.03mm^2.
- Minimum linear dimension of 1.6mm in any direction.

Round pin diameter (mm) = minimum 1.6mm:

Oval/rectangular pin minimum diameter linear dimension = 1.6mm:

7.5.2 Option 2 – Rectangular Pins

Dimensions

The following dimension of rectangular pin has been deemed suitable for gun (pneumatically) fired applications, providing the 1.6mm dimension is predominately oriented perpendicular to the glass, where possible:

- Minimum Standard Wire Gauge (SWG) 16.
- Minimum cross section area of 2.24mm^2.
- Minimum linear dimension of 1.4mm.

Rectangular pin minimum diameter linear dimension = 1.4mm:

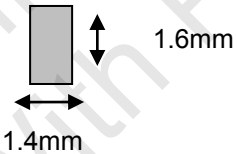

Halspan Authorised Document
Valid Only When Submitted
With Permission Schedule

Orientation

The following plan view diagram depicts the orientation of the pin in relation to the plane of the glass:

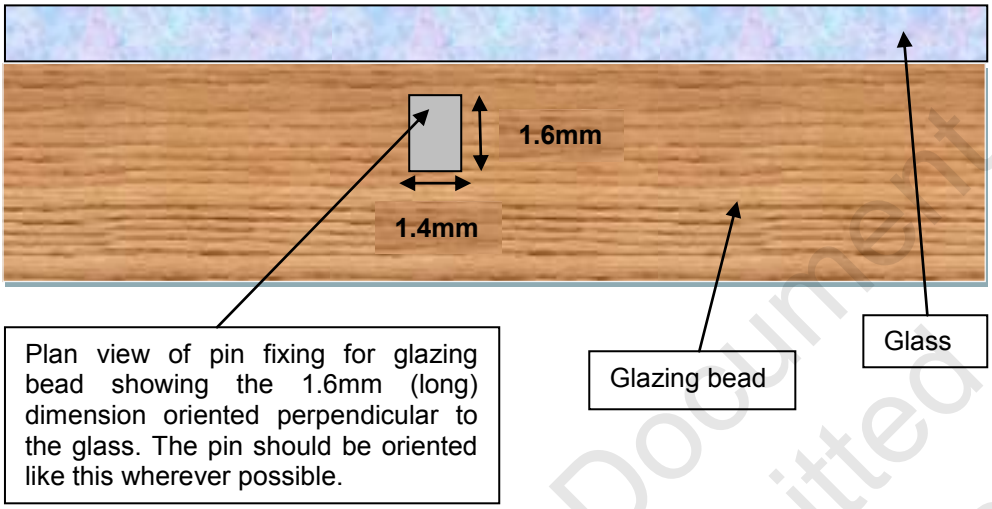

Plan view of pin fixing for glazing bead showing the 1.6mm (long) dimension oriented perpendicular to the glass. The pin should be oriented like this wherever possible.

7.5.3 Option 3 – Thinner Gauge Pins

Based on the glazing tested under Warres 131998, glazing bead pin fixings may be a minimum of 38mm long x 1mm diameter and pneumatically fired, subject to the following limitations:

1. A 6 – 10mm thick square timber liner is fitted around the aperture, constructed from hardwood of min. density 500kg/m^3 and glued in position using a UF, PVA or PU type adhesive.
2. The maximum aperture size does not exceed 1.0m^2.
3. The pins may only be used in conjunction with glazing systems 1-4 (see section 7.2).
4. The pins must be inserted at 45º to the vertical.
5. The pins must be at 200mm maximum centres and no more than 50mm from each corner.
6. The pins may only be used in conjunction with glass types 1-8 and 12-16 (see section 7.3).
7. The beads must be chamfered in accordance with the profile depicted for the relevant system in Appendix C. Square beads are not permitted.
8. The beads must be constructed either from hardwood of minimum density 640kg/m^3 or MDF of minimum density 700kg/m^3.
9. The pins cannot be used in conjunction with the Halspan® 30 multipane glazing system.

7.5.4 Note of Caution

Pins with dimensions less than those stated above are not covered by this assessment.

7.6 Zeroplus Slimport Glazing System

Additional test data; Ref: Warres 117483, is suitable evidence to allow the use of two alternative glazing methods, i.e. Zeroplus Slimport SP250 or SP450 for use with Pyrocet glass only. Installation must be as per the test data. Zero Seal Systems Ltd. must be contacted for details on glazing materials and installation.

Halspan Authorised Document
Valid Only When Submitted
With Permission Schedule

8 Door Frames

8.1 Door Frame Construction

Timber based door frames for Halspan® 30 **Optima** must be constructed to meet the following specification (for steel and aluminium door frame options see Appendices A and B):

Material	**Min. Section Size** (mm)	**Min. Density** (kg/m^3)
Softwood or Hardwood	70 x 28*	450
Hardwood	70 x 22	640
MDF	70 x 30	700

*If the doorset features a transomed overpanel, the door frame must be softwood or hardwood with a minimum section of 70mm x 32mm.

All door frame timber must be straight grained, joinery quality, free from knots, splits and checks.

A 12mm deep planted stop is adequate for single acting frames whilst double acting frames may be scalloped or square (see diagram below).

Frame joints may be mortice and tenoned, mitred, half lapped or butted and with no gaps (see section 8.2). All jointing methods require mechanical fixing with the appropriate size ring shank nails or screws.

The door frame (MDF or timber) may be entirely clad in 2mm thick PVC sheeting for use with leaves either with or without PVC lippings or edge protectors (see section 9.2 & 10) and facing material (see section 11).

The following diagram depicts the assessed frame profiles and dimensions:

A = Min. 70mm B = Min. 22 - 32mm (see table above) C = Min. 12mm
R = radius from floor spring 8mm max. radius to create a maximum 2mm edge profiling

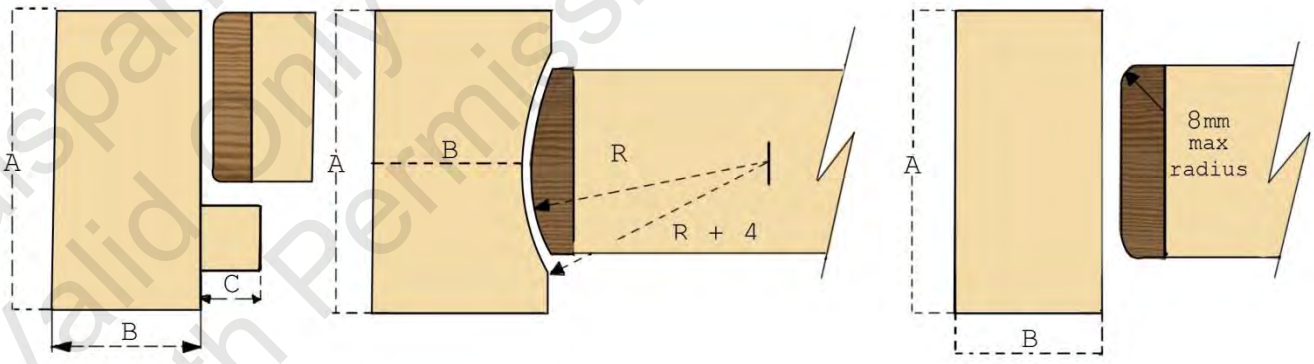

Standard **Scalloped** **Profiled Edges**

Halspan Authorised Document Valid Only When Submitted With Permission Schedule

8.2 Door Frame Joints

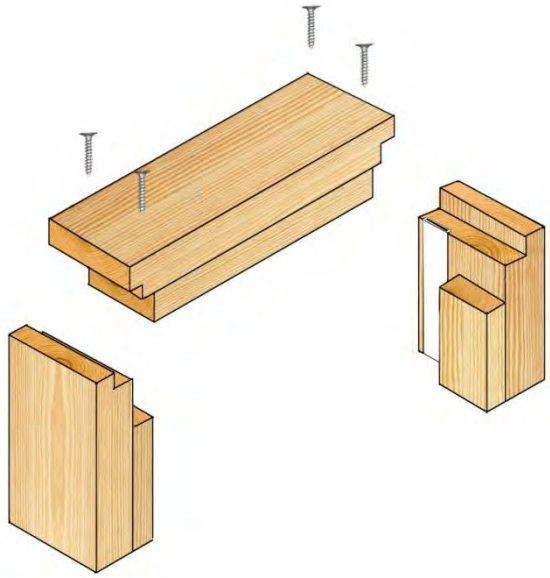

Half Lapped Joint

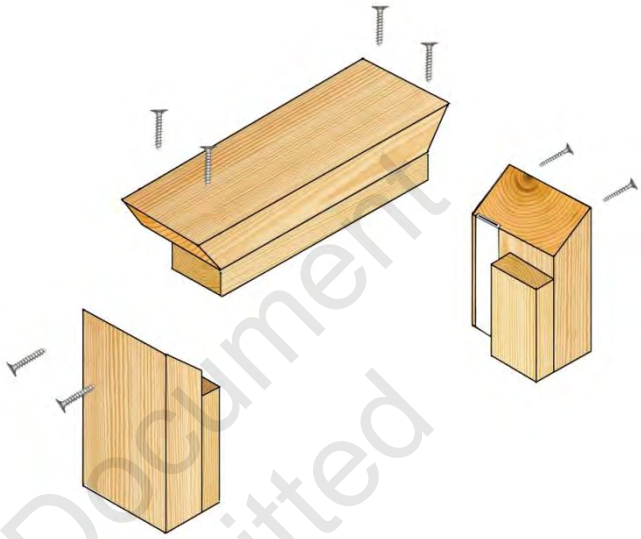

Mitre Joint

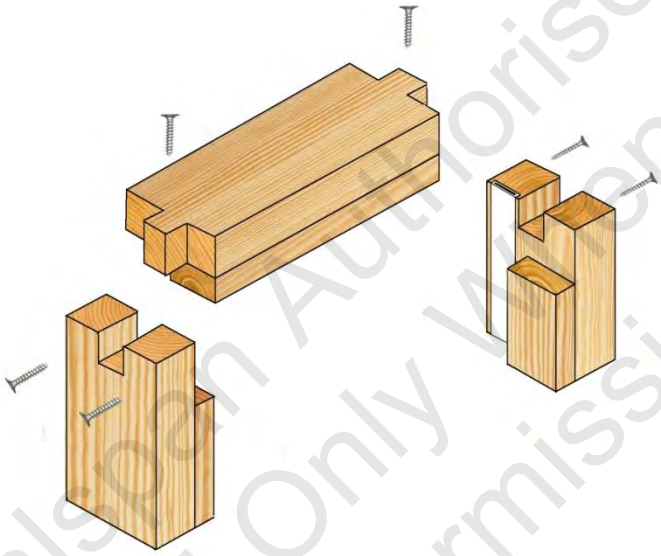

Mortice & Tenon Joint

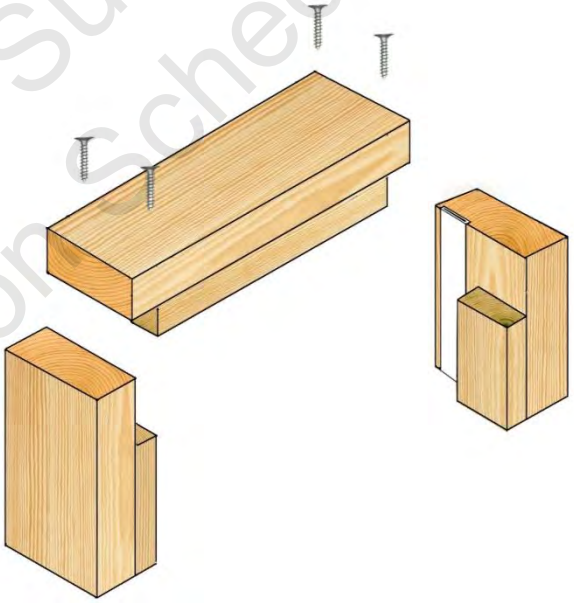

Butt Joint

Note: Drawing is representative of each type of door frame joint; actual construction in terms of intumescent seal location and material, etc. must be as the text within this document specifies.

Halspan Authorised Document
Valid Only When Submitted
With Permission Schedule

8.3 Door Frame Installation

The following diagrams indicate acceptable and unacceptable door frame installations:

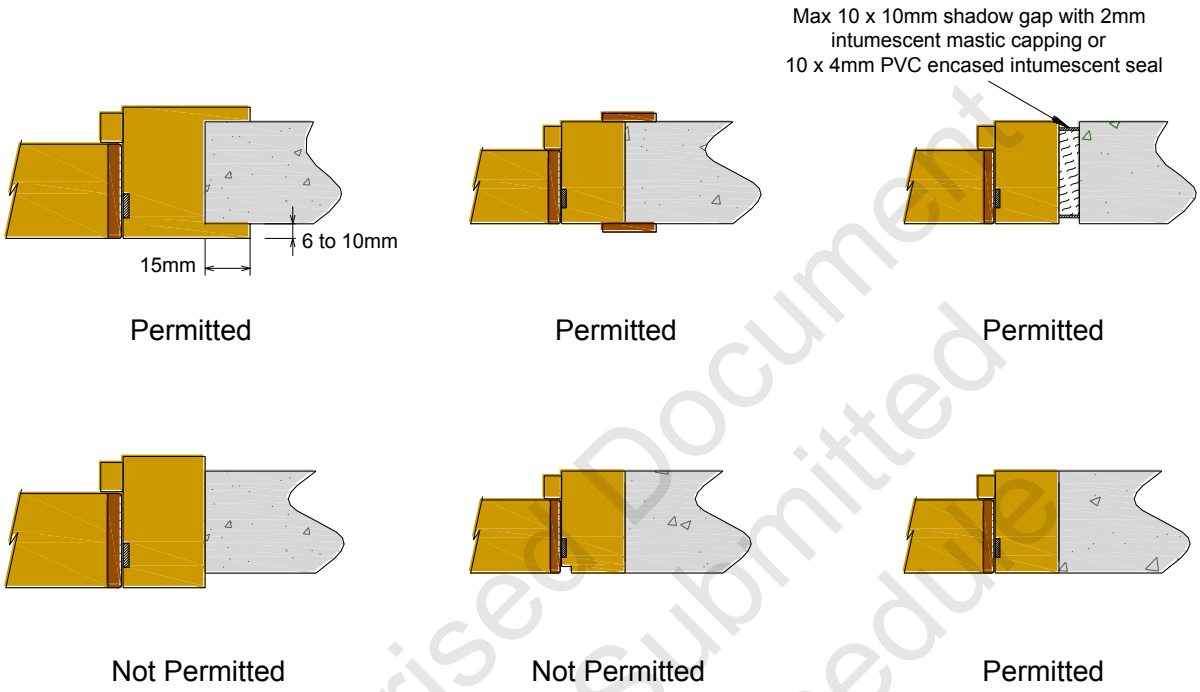

Notes:

1. Drawing is representative of door frame installation; actual installation must be as the text within this document specifies. See section 20 for specification on sealing to structural opening.
2. For the shadow detail depicted above (top right), the sub-frame material must be manufactured from one of the following materials, tightly fitted and with no gaps:
   - Timber with a density ≥450kg/m^3;
   - Plywood with a density ≥600kg/m^3;
   - MDF with a density ≥700kg/m^3;
   - Particleboard with a density ≥600kg/m^3;
   - Non-combustible board.

Halspan Authorised Document Valid Only When Submitted With Permission Schedule

9 Lipping Materials

9.1 Timber Lippings

Halspan® 30 **Optima** must be lipped in accordance with the following specification. The lipping specifications for steel and aluminium frame doorsets are contained in Appendices A & B:

Material	**Size** (mm)	**Min. Density** (kg/m^3)
Straight grained, joinery quality hardwood, free from knots, splits & checks	1. Flat = 6 – 18 thick with a maximum of 2mm profiling permitted at corners of lipping (see section 8.1). 2. Rounded = 8 – 28 thick with a radius matching the distance between leaf edge and floor pivot (see section 8.1). 3. Rebated = 18 – 28 thick with a 13mm deep equal rebate.	500

Notes:

1. Overpanels separated from the leaf heads with a transom do not need to be lipped.
2. Overpanels flush with the leaf heads must be lipped on the bottom edge but may additionally be lipped on all edges, if required.
3. Single and double doorsets without overpanels only require lipping on the vertical edges but additionally may be lipped on the top and bottom edges if required.
4. Leaves to doorsets with flush overpanels must be lipped on the vertical edges and additionally at the bottom edge of the overpanel and top edge of the doors.
5. Double doorsets without flush overpanels may use square or rebated meeting edges.
6. Double doorsets with flush overpanels may use a rebated overpanel junction and rebated meeting edge junction concurrently.
7. A 2.5^0 chamfer is permitted to the lipping at the leading edge of leaves providing the door gaps meet the requirements of section 17.

9.2 PVC Lippings

Halspan® 30 **Optima** may be lipped with PVC in accordance with the following specification:

Material	**Size** (mm)	**Min. Density** (kg/m^3)
PVC	2 thick	-

Notes:

1. Can be fitted direct to Halspan® 30 **Optima** core or onto hardwood lippings, as per section 9.1.

Halspan Authorised Document
Valid Only When Submitted
With Permission Schedule

9.3 'T' Section Lippings

In certain circumstances, a 'T' section lipping may be required which will be bonded into a groove machined in the edge of the leaf. This option is acceptable providing the tongue is a maximum of 38mm wide and otherwise meets the specification given in section 9.1. The 'T' section lipping may be in two sections with the exposed lipping being within the range of 6 – 10mm thick. All glue lines must be as stated in section 13. See drawings below:

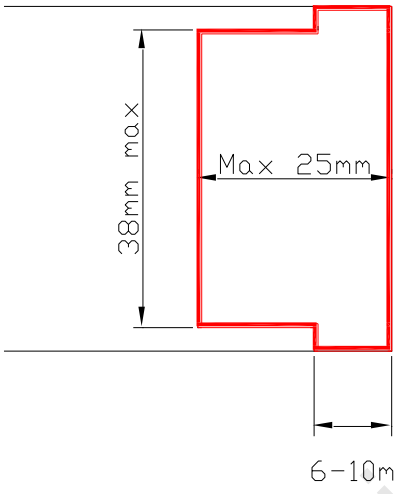

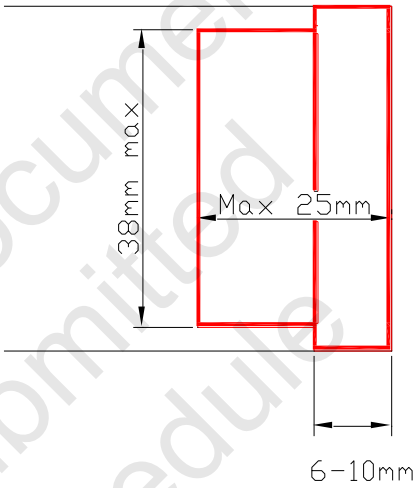

10 Edge Protectors

Fire resistance test RF02048 justifies the use of PVC 2mm thick edge protectors reference 'Type 1, 2, 3, 4' (see Appendix F for sketch details) on the vertical edges of the door leaves. The minimum intumescent specification given in Appendix G must be maintained and the relevant glue lines specified in section 13 must be used. The edge protectors are suitable for use with leaves installed within both timber based and steel based frames. The PVC protectors may be used on double and single leaf doorsets alike.

The performances obtained and the leaf sizes tested in RF02048, when using the PVC edge protectors, will enable the use of these edge protectors on limited door leaf dimensions albeit on all configurations assessed in this report. The maximum leaf dimensions (whichever are the smaller between the appendix graphs and the table below) are therefore as follows:

Doorset Configuration	Maximum Height & Width	
	Type 1 & 3	Type 2 & 4
Single leaf doorsets	2185mm high 940mm wide	2440mm high 940mm wide
Double leaf doorsets	2135mm high 915mm wide	2286mm high 915mm wide

Halspan Authorised Document
Valid Only When Submitted
With Permission Schedule

11 Leaf Facing Materials

11.1 General

The basic 44mm thick Halspan® 30 **Optima** leaf construction has integral facings and does not therefore require additional facing materials as standard.

11.2 Grooves

Both sides of Halspan® 30 **Optima** door leaves may be grooved to the following specification. Grooves may coincide with the top and bottom of glazed apertures if desired:

11.2.1 Option A

Element		Details	
Max. groove size (mm)		Width as required (to a maximum of 50mm wide) x 3mm deep	
Proximity to door edges (mm)		Horizontal Grooves	May extend full width
		Vertical Grooves	May extend full height
Groove spacing (mm)		No closer than 50mm apart. Vertical & horizontal grooves may intersect each other.	
Orientation		Vertical or horizontal	
Configuration		Latched & unlatched, single & double acting, single & double leaf doorsets	
Leaf size range (mm)	**From:**	2135 high x 976 wide	
	To:	2525 high x 825 wide	
Intumescent seal dimensions (mm)		≥ to 20 x 4	

11.2.2 Option B

Element	Details	
Max. groove size (mm)	5 wide x 4 deep	
Proximity to door edges (mm)	Horizontal Grooves	≥ 150 from top and bottom
	Vertical Grooves	≥ 150 from sides
Groove spacing (mm)	Max. 6No. grooves divided between horizontal & vertical orientations as required & spaced minimum 150mm apart	
Orientation	Vertical or horizontal	
Configuration	Latched & unlatched, single & double acting, single & double leaf doorsets	
Leaf size range (mm)	All	
Intumescent seal dimensions (mm)	All	

Halspan Authorised Document
Valid Only When Submitted
With Permission Schedule

11.2.3 Option C

Element	Details	
Max. groove size (mm)	15mm wide x 8mm deep in-filled with hardwood timber (min. 640kg/m^3). The hardwood insert can be machined with a decorative 4mm deep x 5mm wide groove or a 4mm deep 'V' groove	
Adhesive	The hardwood insert must be tightly fitted and glued on all edges using a PVA adhesive	
Proximity to door edges (mm)	Horizontal Grooves	≥ 150 from top and bottom
	Vertical Grooves	≥ 150 from sides
Groove spacing (mm)	Max. 8No. grooves divided between horizontal and vertical orientations as required and spaced minimum 150mm apart	
Orientation	Vertical or horizontal	
Configuration	Latched & unlatched, single & double acting, single & double leaf doorsets	
Leaf size range (mm)	All	
Intumescent seal dimensions (mm)	All	

11.3 Decorative & Protective Facings

The following facing materials are permitted for this door design since they would degrade rapidly under test conditions without significant effect:

Facing Material	Maximum Permitted Thickness (mm)
Paint	0.5
Timber veneers	2
PVC	2
Plastic laminates	2
Decorative paper/non-metallic foil	0.4

Notes:

1. Metallic facings are not permitted except for push plates and kick plates.
2. The door leaf thickness may be reduced by a maximum of 0.6mm to each face (1.2mm in total) to accommodate the chosen facing thickness. The finished leaf thickness must be a minimum of 44mm thick.
3. Materials must not conceal intumescent strips.
4. Other than PVC, the facing materials must not return around the edge of leaf.
5. The PVC may be post-formed over the vertical and horizontal edges, provided that the required intumescent specification detailed in Appendix G is maintained. The maximum radius at the corners of the leaf for post-formed doors is 8mm, see diagram in section 8.1 for details.

Halspan Authorised Document
Valid Only When Submitted
With Permission Schedule

12 Intumescent Materials

12.1 General

The intumescent materials tested and assessed for this doorset design are as follows:

Application	Location	Product/Manufacturer
Edge seals	Fitted in the frame jambs or leaf edges	1. PVC encased Therm-A-Seal – Intumescent Seals Ltd. 2. PVC encased Type SLS – Halspan Ltd. 3. PVC encased Palsuol 100 – Lorient Polyproducts Ltd./Mann McGowan Ltd. 4. PVC encased 500P – Mann McGowan Ltd. 5. PVC encased Type 617 – Lorient Polyproducts Ltd. 6. PVC encased Pyroplex – Pyroplex Ltd. 7. Norfast – Norseal Ltd.
Hinges	Not required	-
Lock/latches	Under forend & keep if the forend or keep exceeds 150mm up to the maximum assessed dimension	1. 1mm Interdens – Dufaylite Developments Ltd. 2. 1mm MAP paper – Lorient Polyproducts Ltd. 3. 1mm Pyrostrip 300 – Mann McGowan 4. 1mm Therm-A-Strip – Intumescent Seals Ltd. 5. 1mm SLS-PAD-107 – Halspan Ltd.
	Under forend & keep for all doorsets in aluminium frames	
Top pivots & flush bolts	Lining all sides of the mortices	1. 2mm Interdens – Dufaylite Developments Ltd. 2. 2mm MAP paper – Lorient Polyproducts Ltd. 3. 2mm Therm-A-Strip – Intumescent Seals Ltd. 4. 2mm Therm-A-Flex – Intumescent Seals Ltd. 5. 2mm SLS-PAD-107 – Halspan Ltd.

Note: The seal specification for each configuration is contained in Appendix G.

12.2 Concealed Intumescent Materials

The Halspan® 30 **Optima** design has been successfully tested with intumescent material concealed in the rear of the vertical edge lippings. The permitted leaf sizes, configurations and intumescent specification are given in the relevant data sheet in Appendix G.

The following construction details must also be followed:

1. The door must only be lipped on the vertical edges and glued using PVA type adhesive.
2. The lippings must be hardwood of minimum density 640kg/m^3.
3. The lippings must be flat and fall within the range of 8 – 12mm thick.
4. The door frame must be a minimum of 70mm (w) x 32mm (t) and constructed from hardwood of minimum density 640kg/m^3.
5. 1mm thick intumescent gaskets must be fitted under all hinge blades, lock forends and keeps.

All other construction details may be as specified in this document, as appropriate.

Halspan Authorised Document
Valid Only When Submitted
With Permission Schedule

13 Adhesives

The following adhesives must be used in the construction:

Element	Product/Manufacturer
Timber lippings	UF, PF, PVA, PVAC or hotmelt
PVC lippings	Contact adhesive

14 Tested Hardware

The following hardware has been successfully incorporated in the tests on Halspan® 30 **Optima** doorsets:

Element	Manufacturer & Product Reference
Hinges	1. 100 x 30mm standard steel butt hinges 2. 110mm Crompton lift-off hinges 3. Royde & Tucker H105 lift-off hinges 4. Royde & Tucker H101 lift-off hinges 5. Stanley Journal lift-off hinges 6. 3No. Cairney Hardware SOSS type hinges 7. 114 x 30mm ASSA lift-off type butt hinge; Ref: 3244 8. 115 x 31mm ASSA lift-off hinges; Ref: 3248 9. 102 x 30mm Halspan R30 steel bearing butt hinge (radius); Ref: HIN-BSS-104 10. 101 x 30mm Halspan R30 steel bearing butt hinge (square); Ref: HIN-BSS-103
Closers	1. Briton 2003 face-fixed overhead closer 2. Dorma TS73 face-fixed overhead closer 3. Ultra 70 series regular arm face-fixed overhead closer 4. Halspan R30 power closer; Ref: CLR-BSS-100 5. Halspan R30 Eco closer; Ref: CLR-AGN-100 6. Cairney Hardware Ltd. Mitron C2300 concealed overhead closer 7. Dorma BTS75V floor spring assembly
Locks & latches	1. Ingersol Rand latch; Ref: 5520.60.R.SS 2. Halspan 30 latch; Ref: LCK-BSS-100 (forend size 155 x 25mm) 3. Henderson Hardware three lever latch/lock 4. Standard tubular mortice latch 5. GU Ferco 3 Deadbolt
Threshold seals	1. Halspan threshold drop seal; Ref: SLS-DRP-100 range 2. Lorient Polyproducts Ltd. IS8010 drop seal

Notes:

1. The GU Ferco 3 Deadbolt requires a 25 x 4mm thick intumescent strip in the closing edge frame reveal in lieu of the specification shown in Appendix G and can only be used on single leaf doorsets of maximum leaf height 2231mm, when used in a hardwood (640kg/m^3) door frame.
2. The Cairney Hardware Mitron C2300 concealed overhead closer must be used with the perimeter intumescent specification given in Appendix G but with the seals fitted in the frame reveal, in conjunction with the Cairney Hardware Mitron 30 minute intumescent package (contact manufacturer for details). The closer is permitted for use with single acting doorsets and the door frame will require a minimum stop depth of 14mm.

Halspan Authorised Document
Valid Only When Submitted
With Permission Schedule

15 Additional & Alternative Hardware

The following section details the permitted scope and constraints for fitting hardware to this door design.

The following items of hardware must also bear the CE Mark:

- Single Axis Hinges: Standard EN 1935
- Latches & Locks: Standard EN 12209
- Controlled Door Closing Devices: Standard EN 1154
- Electro-Mechanically Operated Locks: Standard EN 14846
- Panic Exit Hardware: Standard EN 1125
- Door Co-ordinators: Standard EN 1158.

15.1 Hinges

Leaves <2400mm (h) must be hung on 3 hinges. Leaves >2400mm (h) must be hung on 4 hinges. Hinges with the following specification are acceptable:

Element			Specification
Blade height			90 – 120mm
Blade width (excluding knuckle)			30 – 35mm
Blade thickness			2.5 – 4mm
Fixings			Minimum of 4No. 30mm long No. 8 or No.10 steel wood screws per blade
Materials			Steel, stainless steel or brass (melting point = or > 800°C)
Hinge positions	If 3 hinges are required	Top	100 – 180mm from the head to top of hinge
		2nd	Min. 200mm from top hinge or centrally fitted between top and bottom hinge
		Bottom	150 – 250mm from the foot of leaf to bottom of hinge
	If 4 hinges are required	Top	100 - 180mm from the head to top of hinge
		2nd & 3rd	Equispaced between top & bottom or 2nd hinge 200mm from top hinge & 3rd hinge equally spaced between 2nd & bottom hinge
		Bottom	150 – 250mm from the foot of leaf to bottom of hinge
Intumescent protection			See section 12

15.2 Latches & Locks

Latches and locks must either be as tested, or alternatively components with the following specification are acceptable:

Element	Specification
Maximum forend & strike plate dimensions	235mm high by 25mm wide by 4mm thick
Maximum body dimensions	18mm thick by 100mm wide by 165mm high
Intumescent protection	See section 12
Materials	All parts essential to the locking/latching action (including the latch bolt, forend and strike) to be steel

Halspan Authorised Document Valid Only When Submitted With Permission Schedule

15.3 Roller Catches

Roller catches may be used with this door design but only in conjunction with a self closing device. Roller catches may only be fitted to single acting, single leaf doorsets (SASD) and with door dimensions that fall within that permitted for unlatched, single acting, single leaf doorsets (ULSASD).

The roller catch must be steel or brass and must meet the specification given below:

Maximum forend and strike plate dimensions: 80mm (h) x 35mm (w) x 4mm (t).

Maximum body dimensions: 70mm (h) x 50mm (w) x 20mm (t).

15.4 Automatic Closing

Automatic closing devices, must either be as tested or components of equal specification that have demonstrated contribution to the required integrity performance of this type of doorset design, when tested to BS 476: Part 22: 1987 or BS EN 1634-1.

Note: The top pivots to floorspring assemblies must be protected with 2mm thick intumescent gasket (see section 12) or alternatively the manufacturers tested intumescent pack.

15.5 Flush Bolts

Flush bolts may be incorporated centrally into the top and bottom of one meeting edge, providing the following maximum dimensions are not exceeded and the components are fitted opposite the edge fitted with intumescent strips:

- 200mm long x 20mm deep x 20mm wide.

Flush bolts must be steel or brass and the mortice must be as tight to the mechanism as is compatible with its operation. All edges of the mortice must be protected with intumescent gaskets as specified in section 12. Alternatively the hardware manufacturers tested gaskets may be used. See diagram below for example of intumescent protection to flush bolt.

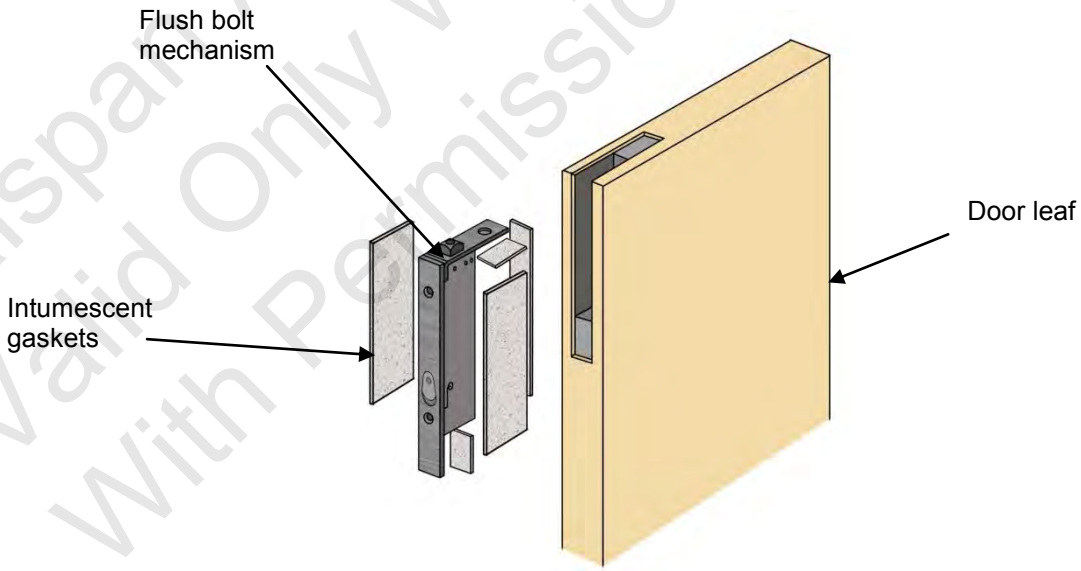

15.6 Pull Handles

Handles may be surface-fixed or bolted through the door leaf, providing they are steel or brass and the length is limited to 1200mm between the fixing points. If through fixed, there must be no more than 1mm clearance between the hole and stud.

Halspan Authorised Document Valid Only When Submitted With Permission Schedule

15.7 Push Plates & Kick Plates

Face-fixed hardware such as push plates and kick plates may be fitted to the doorsets and may be recessed to a maximum depth of 2mm on both sides of the door leaf. These items of hardware are permitted up to a maximum of 20% of the door leaf area if mechanically fixed and a maximum of 30% if bonded with a contact or other thermally softening adhesive. Plates must not return around the door edges.

15.8 Cable-Way

Based on the integrity performance of the doorset construction, with no burn-through of the core material, we consider it acceptable to allow the provision for a concealed cable-way to facilitate electro-magnetic closing/latching mechanisms. The cable-way must be concealed in the following way:

1. A hole drilled centrally through the leaf of maximum 10mm diameter.
2. The cable for the electronic closing/latching mechanisms must be no more than 2mm smaller in diameter than the hole through the leaf.
3. The cable for the electronic closing/latching mechanism must be PVC encased.
4. Cable ways are only permitted for use with latched, single leaf, single acting doorsets with maximum leaf dimensions of 2100mm (h) x 900mm (w).
5. The hole must be located below 1500mm from the threshold and must be spaced a minimum of 90mm from any apertures within the leaf, e.g. glazing, air transfer grilles or letter plates, etc.

This approval is subject to the hardware manufacturer having the appropriate test evidence for the product for use with this type of 30 minute construction. Test evidence generated in steel doorsets is not acceptable. Any tested intumescent gaskets for the lockset, closing mechanism, receiver plate, cable loops, etc. must be replicated.

15.9 Door Security Viewers

Door security viewers with brass or steel bodies of a diameter less than or equal to 15mm may be used provided that the through-hole is bored tight to the case of the viewer (maximum tolerance +1mm). Lenses must be glass and the item must be protected with acrylic intumescent mastic.

15.10 Panic Hardware

Panic hardware may be fitted, providing the installation does not require the removal of any timber from the leaf, stop or frame reveal and it does not interfere with the self-closing action of the door leaf.

15.11 Door Selectors

Selectors may be fitted providing the installation does not require the removal of any timber from the leaf, stop or frame reveal and they do not interfere with the self-closing action of the door leaf.

15.12 Environmental Seals

Silicon based flame retardant acoustic, weather and dust seals (e.g. Halspan Triple Fin; Ref: SLS-TRI-100 range, Norseal 710, Lorient IS1212, IS1511, IS7025, IS7060) may be fitted to this doorset design without compromising the performance, providing their fitting does not interfere with the activation of the intumescent seals or hinder the self-closing function of the leaves.

Halspan Authorised Document
Valid Only When Submitted
With Permission Schedule

15.13 Threshold Seals

The following types of automatic threshold drop seals may be recessed in to the bottom rail of leaves to this design without compromising the performance:

Manufacturer	Product
Halspan Ltd.	SLS-DRP-100 Range
Lorient Polyproducts Ltd.	IS8010Si
Raven	RP8Si
Athmer	Schall-Ex Duo L-15
Norsound Ltd.	NOR810, NOR810S, NOR810dB+

15.14 Letter Boxes/Plates

Letter boxes/plates may be fitted providing the product has demonstrated contribution to the required integrity performance of this type of doorset design, when tested to BS 476: Part 22: 1987 or BS EN 1634-1, when installed in a timber based doorset of comparable thickness. Products may be fitted up to 1200mm from floor level and no closer than 100mm to any leaf edge.

15.15 Air Transfer Grilles

15.15.1 General

Air transfer grilles may be fitted providing the product has suitable test evidence to BS 476: Part 22: 1987 or BS EN 1634-1 that demonstrates a minimum 30 minutes integrity performance when installed within a timber based doorset of comparable thickness. Margins to the leaf edges will remain as detailed for glazing and the position of the unit will be dictated by the pressure regime tested in the proving evidence (normally below mid-height). The area occupied by the air transfer grille must not exceed that proven by the supporting fire test for the specific type of grille being used, and must be deducted from the percentage of glazing, if both elements are fitted.

15.15.2 Pyroplex Air Transfer Grilles

The following fire tested Pyroplex air transfer grilles have been assessed as acceptable for use with the Halspan® 30 **Optima** product.

The grilles must be fitted no closer than 100mm from the edge of the door leaf and a minimum of 80mm apart if more than one grille is to be fitted. The area occupied by the air transfer grille(s) must be deducted from the percentage of glazing, if both elements are fitted. The grilles may be fitted up to a maximum height of 2200mm from the threshold.

Part No.	**Dimensions** (mm)	**Air Flow** (sq. cm)	**Compatible Faceplates**
ATG 1500	150 x 150	153	FP1500
ATG 1503	150 x 300	307	FP1503
ATG 1300	300 x 300	614	FP1300
ATG 2251	112 x 225	161	FP2251
ATG 2250	225 x 225	323	FP2250

The Pyroplex air transfer grilles must be installed in accordance with the manufacturer's installation details, which include a 6mm thick hardwood aperture liner

Halspan Authorised Document Valid Only When Submitted With Permission Schedule

and Pyroplex intumescent mastic applied around the perimeter of the grille. Full details can be obtained from Pyroplex Ltd.

16 Classification of Timber

All timber must be straight grained, joinery quality, free from knots, splits and checks.

17 Door Gaps

For fire resistance applications, door gaps and alignment tolerances must fall within the following range:

Location	Dimensions
Door edge gaps	Representative of those tested but as a guideline, a minimum of 2mm and a maximum of 4mm
Alignment tolerances	Leaves must not be proud of each other or from the door frame by more than 1mm
Threshold	10mm between bottom of leaf and top of floor covering

18 Structural Opening

The supporting construction must provide the required level of fire resistance designated for the doorset design and be a suitable medium to permit adequate fixity.

19 Fixings

The frame jambs are to be fixed to the supporting construction using steel fixings at 600mm maximum centres. The fixings must be of the appropriate type for the supporting construction and must penetrate to a minimum depth of 40mm. It is not necessary to fix the frame head, although packers must be inserted.

20 Sealing to Structural Opening

The door frame to structural opening gap must be protected using one of the following methods:

1. Gaps up to 10mm must be sealed on both sides with a 10mm depth of acrylic intumescent mastic, fire tested for this application to BS 476: Part 22: 1987 or BS EN 1634-1. Joint must be fitted with 15mm thick architraves overlapping at least 15mm each side.

2. Gaps between 10mm and 20mm must be tightly packed with mineral fibre capped on both sides with a 10mm depth of acrylic intumescent mastic, fire tested for this application to BS 476: Part 22: 1987 or BS EN 1634-1. Architraves are optional.

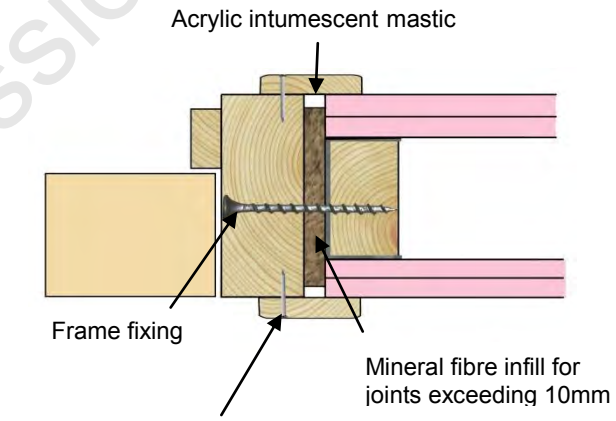

Halspan Authorised Document Valid Only When Submitted With Transmission Schedule

3. Gaps up to 20mm filled with proprietary fire stopping product (e.g. expanding PU foam or preformed compressible intumescent foam). Products must be tested for this application to BS 476: Part 22: 1987 or BS EN 1634-1. Joint must be fitted with 15mm thick architraves overlapping at least 15mm each side.	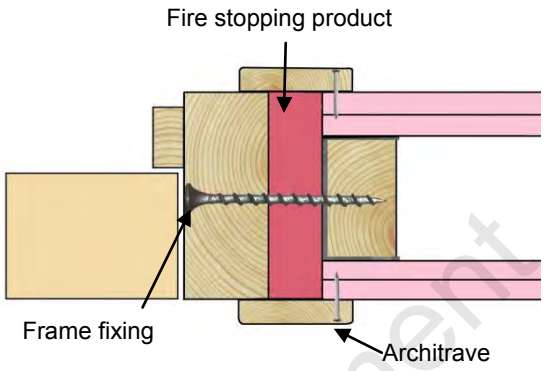
4. Timber based or non-combustible sub-frame up to 50mm thick, with no gaps between the components. Joint must be fitted with 15mm thick architraves overlapping at least 15mm each side.	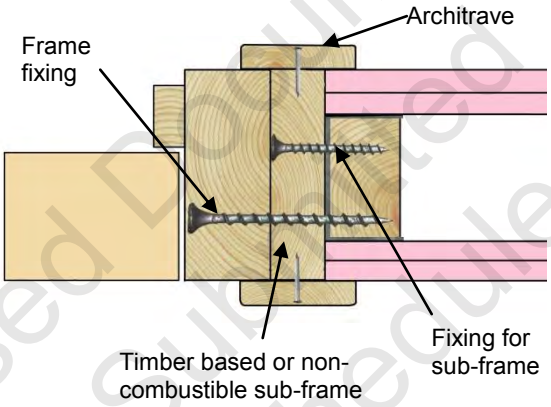
5. Timber based or non-combustible sub-frame up to 50mm thick, with gaps up to 10mm between the components filled on both sides with 10mm depth of acrylic intumescent mastic or full depth expanding PU foam, fire tested for this application to BS 476: Part 22: 1987 or BS EN 1634-1. Joint must be fitted with 15mm thick architraves overlapping at least 15mm each side.	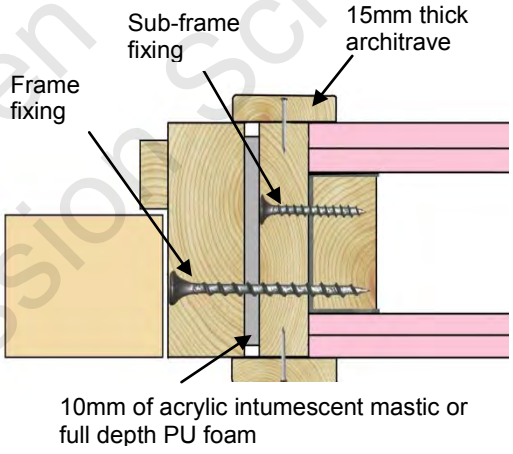

Guidance for various methods of sealing the frame to structural opening gap is also given in BS 8214: 2008, “Code of practice for fire door assemblies”, which may be referred to where appropriate.

Note: Drawings are representative of doorset installation only; actual installations must be as the text within this document specifies.

Halspan Authorised Document Valid Only When Submitted With Permission Schedule

21 Insulation

Insulation performance may be claimed for a doorset to this design meeting the following:

Type		Details
Partially insulating		Doorsets incorporating up to 20% of non-insulating glazing
Fully insulating	Timber frames	Unglazed doorsets or doorsets including 30 minute insulating glazing (e.g. 15mm Pyroswiss, 15mm Pyrostop or 16mm Pyrobel)
	Steel frames back filled with mortar/concrete	Unglazed doorsets or doorsets including 30 minute insulating glazing (e.g. 15mm Pyroswiss, 15mm Pyrostop or 16mm Pyrobel)

22 Smoke Control

22.1 General

If the doorset design is required to provide a smoke control function to comply with Building Regulations, in the absence of a suitable pressurisation system, the doorset must meet one of the following criteria:

(a) have a leakage rate not exceeding $3m^3/m/hour$ (head and jambs only) when tested at 25Pa under BS 476 *Fire tests on building materials and structures*, Section 31.1 - *Methods for measuring smoke penetration through doorsets and shutter assemblies, Method of measurement under ambient temperature conditions*; or

(b) meet the additional classification requirement of Sa when tested to BS EN 1634-3: 2004 - *Fire resistance tests for door and shutter assemblies*, Part 3 – *Smoke control doors*.

Smoke seals or combined intumescent/smoke seals that are fitted to the door to achieve the performance requirements specified above, must have been tested in accordance with the associated test method. Providing the smoke seals, any interruptions, door gaps, and the type/configuration of the doorset are consistent with the detail tested, the doorset will comply with current smoke control legislation under Approved Document B; and a suffix 'S' or 'Sa', as appropriate, may be added to the designation. Any other components installed where smoke leakage may occur must also be taken into account.

The following products can be used for smoke control purposes:

- Halspan Triple Fin (Ref: SLS-TRI-100/2) – fitted in the frame reveal in the upstand of the stop.
- Halspan Trident Seal (Ref: SLS-TRI-103/5) – fitted in the leaf edge or frame reveal.
- Halspan threshold drop down seal (Ref: SLS-DRP-100 range) – fitted in the bottom edge of the leaf.
- Norseal 810 drop seal – fitted in the bottom edge of the leaf.
- Norseal 710 perimeter seal – fitted in the frame reveal against the upstand of the door stop.
- Norseal 720 perimeter seal – fitted in the leaf edge or frame reveal.

Halspan Authorised Document Valid Only When Submitted With Permission Schedule

Note: The incorrect specification and fitting of smoke seals may impair the operation of a doorset and therefore compromise the fire resistance performance. Advice should be sought from the seal manufacturers regarding the correct specification and installation of smoke seals or combined smoke and intumescent seals.

22.2 Further Considerations

Note that there is other guidance available, including BS EN 9999-2008 - *Code of practice for fire safety in the design, management and use of buildings,* which may impose different or additional requirements, such as consideration of the gap between door leaf and threshold.

Responsibility for the appropriate smoke sealing specification and performance of the doors should be agreed between the relevant parties (i.e. specifier, manufacturer, contractor) prior to commencing manufacture and/or installation.

23 Conclusion

If the Halspan® 30 **Optima** doorset design, constructed in accordance with the specification documented in this global assessment, were to be tested in accordance with BS 476: Part 22: 1987, it is our opinion that it would provide a minimum of 30 minutes integrity and insulation (subject to section 21).

Halspan Authorised Document
Valid Only When Submitted
With Permission Schedule

24 Declaration by the Applicant

1. We the undersigned confirm that we have read and comply with obligations placed on us by FTSG Resolution No. 82: 2001.
2. We confirm that the component or element of structure, which is the subject of this assessment, has not to our knowledge been subjected to a fire test to the Standard against which this assessment is being made.
3. We agree to withdraw this assessment from circulation should the component or element of structure be the subject of a fire test to the Standard against which this assessment is being made.
4. We are not aware of any information that could adversely affect the conclusions of this assessment.
5. If we subsequently become aware of any such information we agree to ask the assessing authority to withdraw the assessment.

Signed:

Name: Chris Houchen

For and on behalf of: **HALSPAN LTD.**

Halspan Authorised Document Valid Only When Submitted With Permission Schedule

25 Limitations

The following limitations apply to this assessment:

1. This assessment addresses itself solely to the elements and subjects discussed and does not cover any other criteria. All other details not specifically referred to should remain as tested or assessed.
2. This assessment is issued on the basis of test data and information to hand at the time of issue. If contradictory evidence becomes available, BM TRADA reserves the right to withdraw the assessment unconditionally but not retrospectively.
3. This assessment has been carried out in accordance with Fire Test Study Group Resolution No. 82: 2001.
4. Opinions and interpretations expressed herein are outside the scope of UKAS accreditation.
5. This assessment relates only to those aspects of design, materials and construction that influence the performance of the element(s) under fire resistance test conditions. It does not purport to be a complete specification ensuring fitness for purpose and long-term serviceability. It is the responsibility of the client to ensure that the element conforms to recognised good practice in all other respects and that, with the incorporation of the guidance given in this assessment, the element is suitable for its intended purpose.

26 Validity

1. The assessment is initially valid for five years after which time it is recommended to be submitted to BM TRADA for re-appraisal.
2. This assessment report is not valid unless it incorporates the declaration given in Section 24 duly signed by the applicant.

Signature:		
Name:	**J Godfrey**	**P N Barker**
Title:	Product Assessor	Principal Technical Officer

Halspan Authorised Document Valid Only When Submitted With Permission Schedule

Appendix A

Halspan® 30 Optima Steel Frame Doorsets

1. Introduction

This appendix contains the information relating to Halspan® 30 **Optima** doorsets utilising steel door frames. The assessment uses the same extrapolation and interpretation techniques applied for the main assessment and is an evaluation of the potential fire resistance performance, if the elements were to be tested in accordance with BS 476: Part 22: 1987.

2. General Specification of Construction

The door leaves for Halspan® 30 **Optima** steel framed doorsets are manufactured in accordance with the design as specified in section 2 of FEA/F97174 Revision E. All other aspects of the construction specification are identical to that detailed in the main assessment except where specifically discussed in the following paragraphs.

3. Leaf Sizes & Configurations

The assessed leaf sizes and configurations are based on the constructions and performances obtained from the specimens tested in Warres 111201, RF01073 and RF01074. Data sheets specifying the maximum approved leaf sizes and graphs detailing the permitted gradient between height and width are contained in Appendix G.

The maximum assessed overpanel height for steel framed doorsets is 500mm. Doorsets must use a flush overpanel to leaf head junction.

Steel transomed assemblies are not permitted.

4. Lippings

Steel framed Halspan® 30 **Optima** must be lipped on all edges in accordance with the following specification:

Material	**Size** (mm)	**Min. Density** (kg/m^3)
Straight grained, joinery quality hardwood, free from knots, splits and checks	1. Flat = 6 – 13 thick with a maximum of 2mm profiling permitted at corners of lipping (see section 8.1). 2. Rounded = 6 – 13 thick with a radius matching the distance between leaf edge and floor pivot (see section 8.1).	640

5. Door Frames

The tested frame specification for doorsets to this design comprised the following:

- Material: 1.5mm thick rolled mild steel
- Section: 151mm wide x 62mm thick excluding a 13mm deep x 48mm wide integral stop
- Head to jamb jointing detail

The door frames must be manufactured from mild steel as tested or alternatively stainless steel of the appropriate grade, e.g. 304 or 316 may be used. The frame dimensions may be varied within the following parameters:

Halspan Authorised Document
Valid Only When Submitted
With Permission Schedule

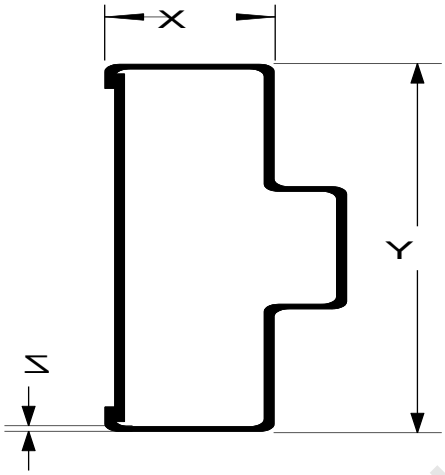

X: + 10% or – 67%
Y: + or – 35% (providing the frame reveal dimensions are maintained)
Z: + 100% and – 0%

The frame may be hollow or back filled with mortar or concrete. Plasterboard, mineral fibre, glass fibre, polyurethane expanding foam and ceramic wool must not be used. Appendix G details the different leaf size scopes and intumescent specifications for hollow and backfilled frame constructions.

6. Fixings

Fixings must be of the appropriate type and length for the structural opening medium and must include a minimum of 1 fixing per 600mm of vertical edge, with a fixing no more than 350mm from the top and bottom corners and one fixing across the head of single leaf doors and two fixings equally spaced across the head of double leaf doors.

7. Sealing to Structural Opening

Gaps between door frames and structural openings must be protected with proprietary materials that have been successfully tested for this application.

8. Structural Openings

Halspan® 30 **Optima** steel framed doorsets may be fitted into the following types of structural opening:

- Cast dense concrete
- Dense concrete blocks or brickwork
- Masonry
- Lightweight concrete
- Lightweight aerated concrete
- Timber stud partition
- Steel stud partition (apertures must be framed by steel studs, which have a minimum of 45 x 45mm softwood stiffeners to the vertical edges).

Halspan Authorised Document
Valid Only When Submitted
With Permission Schedule

Appendix B

Halspan® 30 Optima Aluminium Frame Doorsets

1. Introduction

This appendix contains the information relating to Halspan® 30 **Optima** doorsets utilising aluminium door frames. The assessment uses the same extrapolation and interpretation techniques applied for the main assessment and is an evaluation of the potential fire resistance performance, if the elements were to be tested in accordance with BS 476: Part 22: 1987.

2. General Specification of Construction

The door leaves for aluminium framed Halspan® **Optima** 30 doorsets are manufactured in accordance with the design as specified in section 2 of FEA/F97174 Revision E. All other aspects of the construction specification are identical to that detailed in the main assessment except where specifically discussed in the following paragraphs.

3. Leaf Sizes & Configurations

The assessed leaf sizes and configurations are based on the constructions and performances obtained from the specimens tested in BTC 5547F and Warres 118289. Data sheets specifying the maximum approved leaf sizes and graphs detailing the permitted gradient between height and width are contained in Appendix G.

The maximum assessed overpanel height for aluminium framed doorsets is 500mm. Doorsets must use a flush overpanel to leaf head junction.

Aluminium transomed assemblies are not permitted.

4. Lippings

Aluminium framed Halspan® 30 **Optima** must be lipped on all edges in accordance with the following specification:

Material	**Size** (mm)	**Min. Density** (kg/m^3)
Straight grained, joinery quality hardwood, free from knots, splits and checks	1. Flat = 6 – 13 thick with a maximum of 2mm profiling permitted at corners of lipping (see section 8.1).	640

Halspan Authorised Document
Valid Only When Submitted
With Permission Schedule

5. Door Frames

The tested frame specification for doorsets to this design comprised the following:

- Material: Aluminium
- Section: Minimum 100mm wide x 35mm wide (including integral architraves covering the partition or structural opening by 20mm) x 2mm thick. Only single acting frames are assessed requiring a minimum 12mm deep stop.

Door frames may be of the wrap around type, enclosing the partition edge and the rear of the frame must be a contact fit with the structural opening. Alternatively frames may sit within the structural opening and be infilled with a minimum of 87mm x 20mm hardwood (min. density 640kg/m^3) and aluminium or other suitable architraves fitted on both sides of the frame to partition junction. Frames must be manufactured from grade 6063-16 aluminium, or superior.

The construction of frames may be varied within the following parameters:

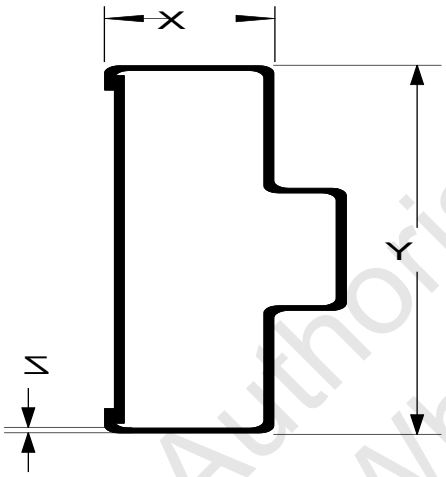

X: – 0% + 10%

Y: – 35% + Unlimited providing the frame reveal dimensions are maintained

Z: – 0% + Unlimited.

Halspan Authorised Document
Valid Only When Submitted
With Permission Schedule

6. Fixings

Fixings must be of the appropriate type and length for the structural opening medium and must include a minimum of 5 fixings per jamb and one fixing across the head of single leaf doors and two fixings equally spaced across the head of double leaf doors.

7. Structural Openings

Halspan® 30 **Optima** aluminium framed doorsets may be fitted into the following types of structural opening:

- Cast dense concrete
- Dense concrete blocks or brickwork
- Masonry
- Lightweight concrete
- Lightweight aerated concrete
- Timber stud partition
- Steel stud partition (apertures must be framed by steel studs, which have a minimum of 45 x 25mm softwood stiffeners to the vertical edges)
- Gaps between doorframes and structural openings are not acceptable.

Halspan Authorised Document
Valid Only When Submitted
With Permission Schedule

Appendix C

30 Minute Proprietary Glazing Systems

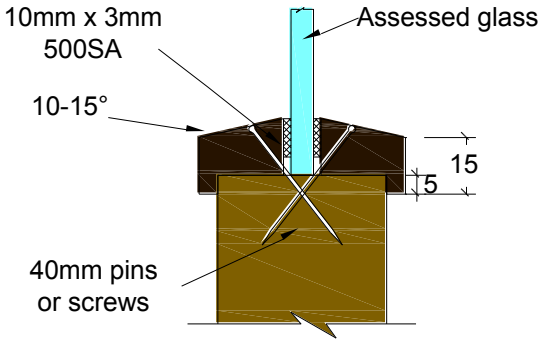

Pyroglaze 30
Mann McGowan Ltd

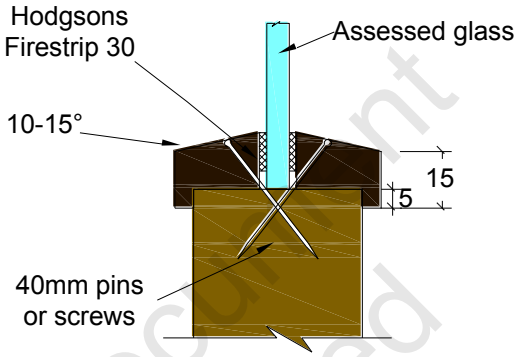

Firestrip 30
Hodgsons Sealants Ltd

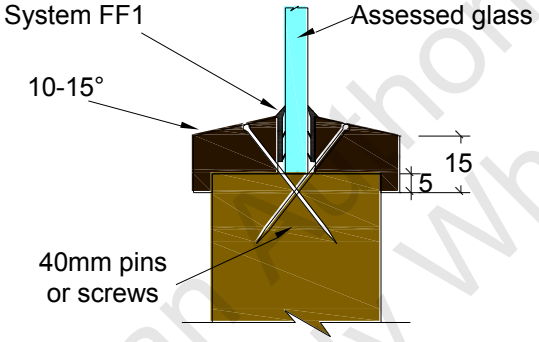

System FF1
Lorient Polyproducts Ltd

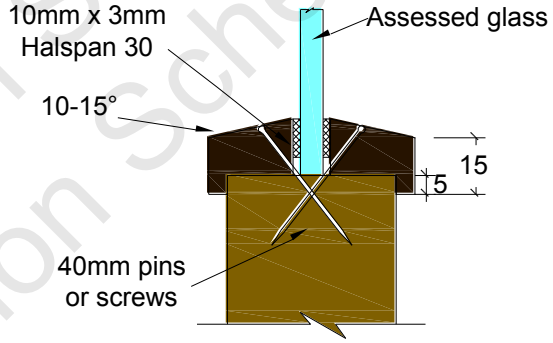

Halspan 30
Halspan Ltd

Halspan Authorised Document
Valid Only When Submitted
With Permission Schedule

Assessed glass

Hodgsons
Firestrip 30

Assessed glass

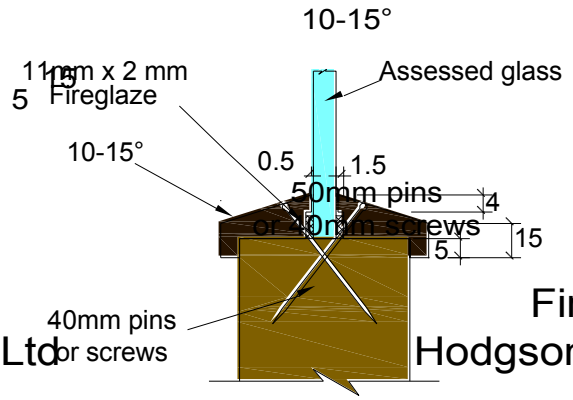

roglaze 30
McGowan Ltd

Fireglaze
Sealmaster Ltd

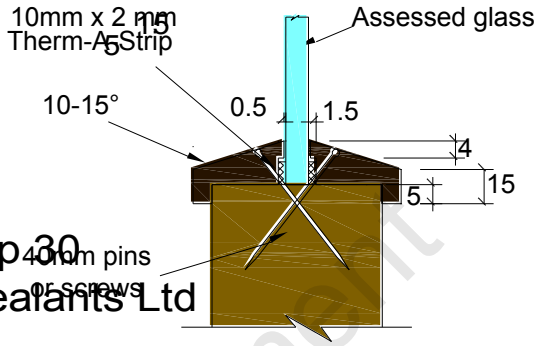

Firestrip 30
Hodgsons Sealants Ltd

Therm-A-Strip
Intumescent Seals Ltd

System FF1

Assessed glass

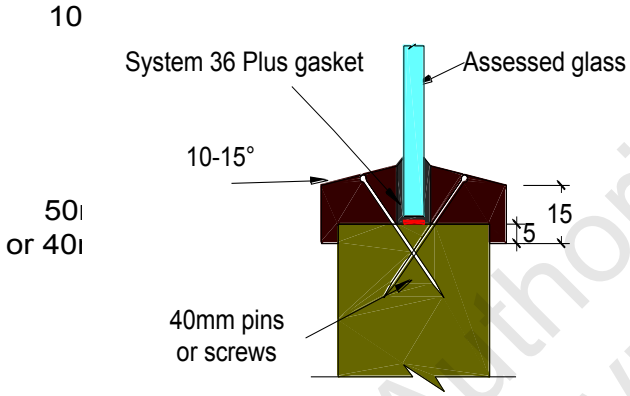

System 36 Plus
Lorient Polyproducts Ltd

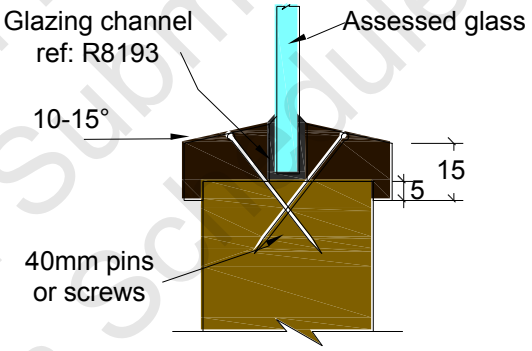

Pyroplex Ltd

Assessed glass

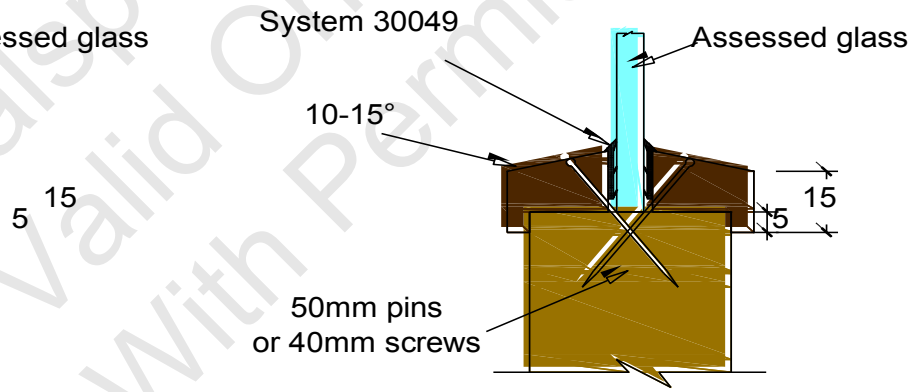

yroplex Ltd

Pyroplex Ltd

Halspan Authorised Document
Valid Only When Submitted
With Permission Schedule

Tested Glazing System for ESG Pyrotech 630 Glass

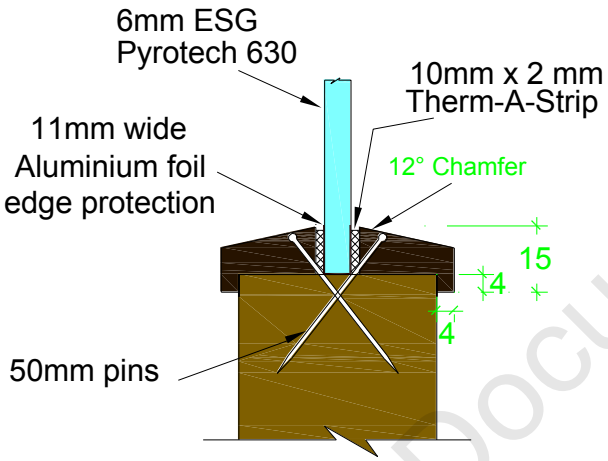

Assessed Square Glazing Bead Profiles

(The following square bead profiled may be used as an alternative to the splayed beads detailed above – refer to section 7 for glazing system and glass restrictions).

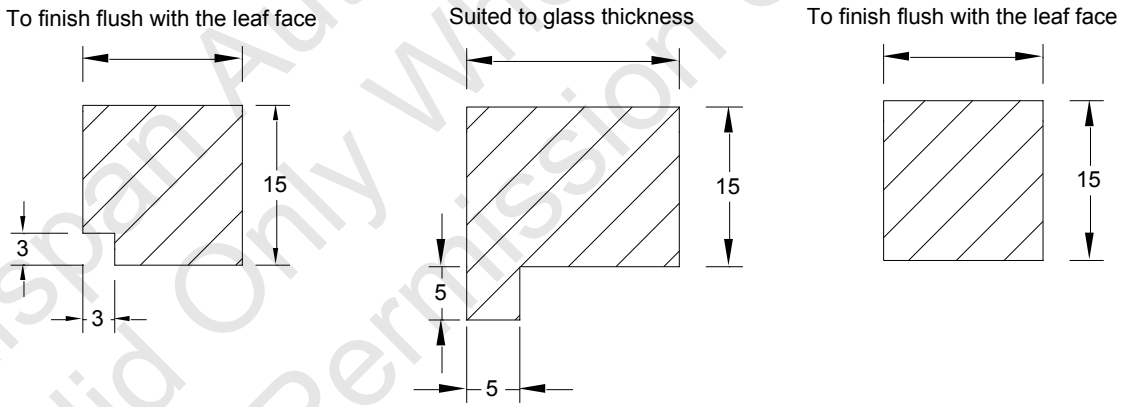

Halspan Authorised Document Valid Only When Submitted With Permission Schedule

Halspan® 30 Minute Glazing Systems

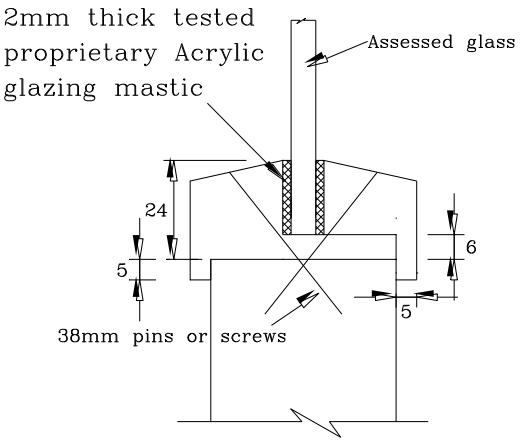

Sureglaze 30 Splayed

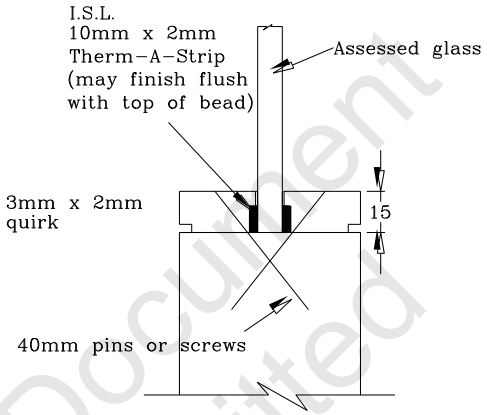

Halspan Square Bead
Halspan Ltd

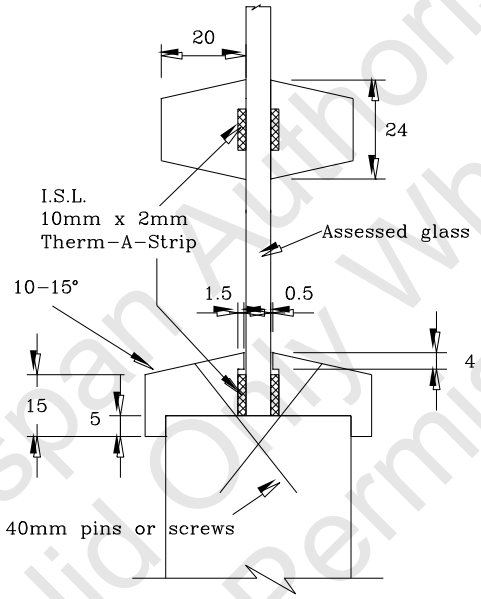

Halspan Cassette
Halspan Ltd

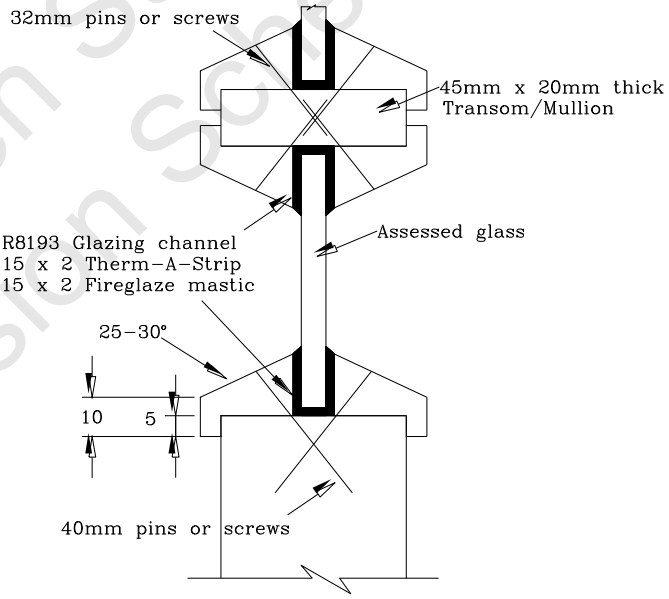

Halspan Multi–Pane Glazing
Halspan Ltd

Halspan Authorised Document
Valid Only When Submitted
With Permission Schedule

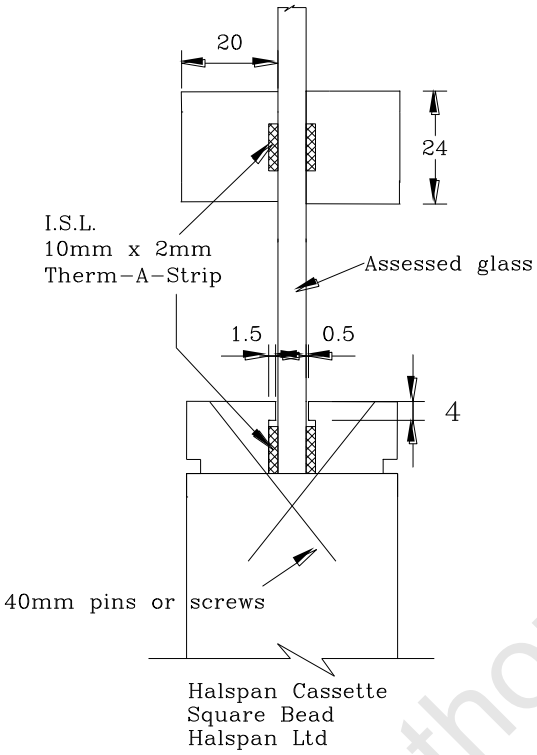

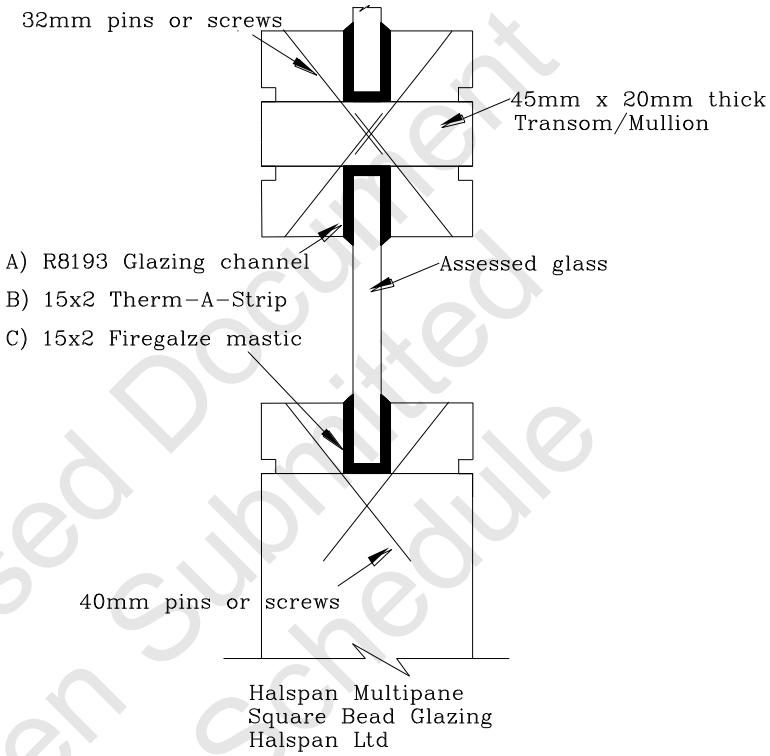

Halspan Authorised Document
Valid Only When Submitted
With Permission Schedule

Appendix D

Performance Data

Primary Data

Report No.	Configuration	Leaf Size (mm)	Test Standard	Performance (mins)
RF01103A	ULSADD	2085 x 850/442 x 44	BS 476: Part 22: 1987	39
RF06048A	DASD	1980 x 755 x 45	BS 476: Part 22: 1987	34

Supplementary Data

Report No.	Test Standard	Performance (mins)
Test evidence contained within FEA/F97174 Rev. G (Halspan 30 Prima)	BS 476: Part 22: 1987	30

Halspan Authorised Document
Valid Only When Submitted
With Permission Schedule

Appendix E

Revisions

Rev.	BM TRADA Ref.	Date	Description
A	Chilt/A02222B	22.11.02	Revision of the assessment scope.
B	Chilt/A03076	29.04.03	Revision of the assessment scope.
C	Chilt/A05009	03.03.05	Revision of the assessment scope.
D	Chilt/A10087	12.08.10	Revision of the assessment scope, technical review, update & revalidation for 5 years.
E	CNA/F15165	10.08.15	Technical review, update & revalidation for a further 5 years with additional scope and test evidence included based on the Halspan Prima design where technically justifiable. The 38mm thick core plus facing options has been removed from the scope of this assessment.

Halspan Authorised Document
Valid Only When Submitted
With Permission Schedule

Appendix F

PVC Edge Protectors

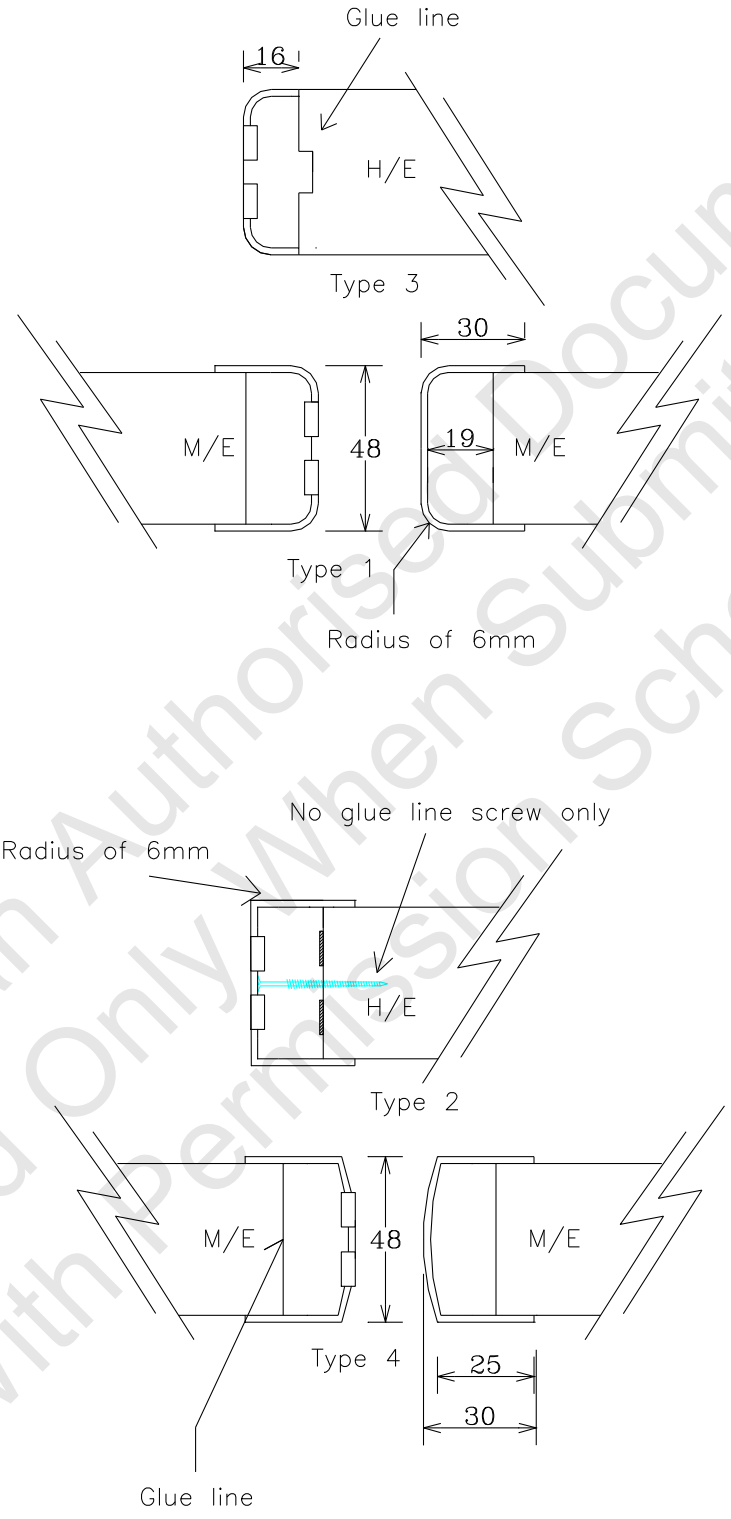

Halspan Authorised Document Valid Only When Submitted With Permission Schedule

Appendix G

Date Sheets for:

Halspan® 30 Optima

30 Minute Fire Resisting Doorsets

Halspan Authorised Document
Valid Only When Submitted
With Permission Schedule

Halspan® 30 Optima Doorsets – 30 Minutes Fire Resistance

Latched & Unlatched, Single & Double Acting, Single Doorsets

	Configuration		Height (mm)		Width (mm)
Leaf Sizes	LSASD, ULSASD & DASD	From:	2135	x	1200
		To:	2800	x	915
Maximum Overpanel Height (mm)		Transomed	2000		
Glazing		Max. Glazed Area	1.75m^2 (see section 7 for details)		
		Approved Systems	See section 7 and Appendix C		
Frame Specification (see section 8)		Material	Softwood	Hardwood	MDF
		Min. Section (mm)	70 x 28	70 x 22	70 x 30
		Min. Density(kg/m^3)	450	640	700

INTUMESCENT MATERIALS: PVC encased Palusol 100, Type 617, Therm-A-Seal, Pyroplex or Halspan® Type SLS

HEAD: 1No. 10x4mm exposed and fitted centrally in the leaf or frame head. Leaves over 2200mm high increase to 1No. 20x4mm.

JAMBS: 1No. 10x4mm exposed and fitted centrally in the leaf or frame reveal. Leaves over 950mm wide increase to 1No. 15x4mm.

HARDWARE PROTECTION: See section 12.

Halspan Authorised Document Valid Only When Submitted With Permission Schedule

Halspan® 30 Optima Doorsets – 30 Minutes Fire Resistance

Latched & Unlatched, Single & Double Acting, Single Doorsets + Overpanel

	Configuration		Height (mm)		Width (mm)
Leaf Sizes	LSASD+OP, ULSASD+OP & DASD+OP	From:	2135	x	1100
		To:	2650	x	910
Maximum Overpanel Height (mm)			2000		
Glazing		Max. Glazed Area	1.75m^2 (see section 7 for details)		
		Approved Systems	See section 7 and Appendix C		
Frame Specification (see section 8)		Material	Softwood	Hardwood	MDF
		Min. Section (mm)	70 x 28	70 x 22	70 x 30
		Min. Density(kg/m^3)	450	640	700

INTUMESCENT MATERIALS: PVC encased Palusol 100, Type 617, Therm-A-Seal, Pyroplex or Halspan® Type SLS

HEAD:
Square: 1No. 15x4mm exposed and fitted centrally in the leaf or bottom of the overpanel. Leaves over 2400mm high increase to 1No. 20x4mm.
Rebated: 2No. 10x4mm exposed with one seal fitted centrally in the rebate of the leaf and one seal fitted centrally in the bottom of the overpanel rebate.

JAMBS: 1No. 10x4mm exposed and fitted centrally in the leaf or frame reveal.

HARDWARE PROTECTION: See section 12.

Halspan Authorised Document Valid Only When Submitted With Permission Schedule

Maximum Door Leaf Size

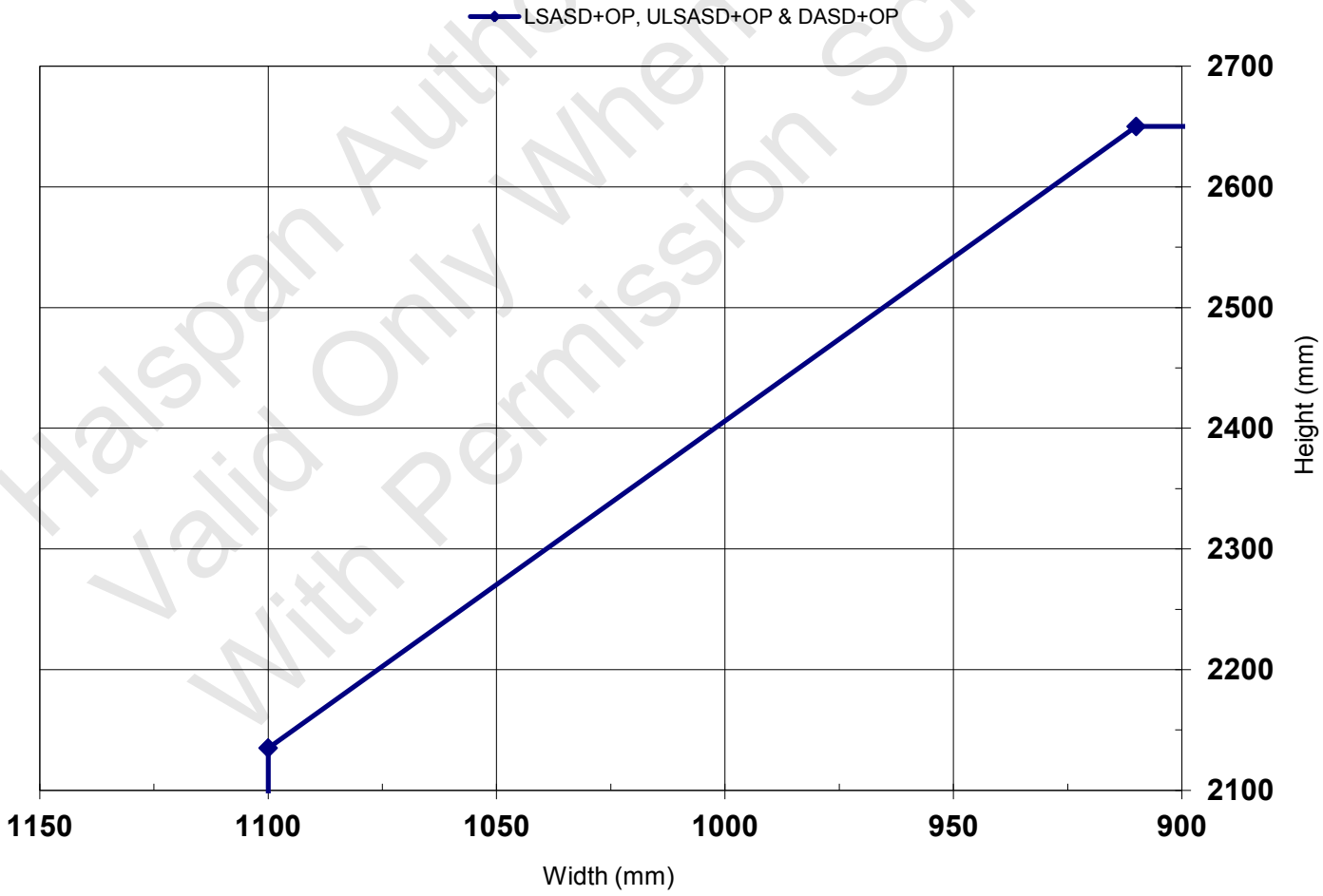

Halspan® 30 Optima Doorsets – 30 Minutes Fire Resistance

Latched & Unlatched, Single & Double Acting, Double Doorsets

	Configuration		Height (mm)		Width (mm)
Leaf Sizes	LSADD, ULSADD & DADD	From:	2135	x	1100
		To:	2600	x	910
Maximum Overpanel Height (mm)		Transomed	1500		
Glazing		Max. Glazed Area	1.75m^2 (see section 7 for details)		
		Approved Systems	See section 7 and Appendix C		
Frame Specification (see section 8)		Material	Softwood	Hardwood	MDF
		Min. Section (mm)	70 x 28	70 x 22	70 x 30
		Min. Density(kg/m^3)	450	640	700

INTUMESCENT MATERIALS: PVC encased Palusol 100, Type 617, Therm-A-Seal, Pyroplex or Halspan® Type SLS

HEAD:
Square: 1No. 10x4mm exposed and fitted centrally in the leaf or frame head. Leaves over 2400mm high, increase to 1No. 15x4mm.

MEETING EDGES:
Square: 2No. 10x4mm exposed with each seal fitted centrally in both leaf edges, or 2No. 10x4mm exposed and fitted 5mm either side of the centreline in one leaf edge only.
Rebated: 2No. 15x4mm exposed with each seal fitted centrally in the rebate of each leaf.

JAMBS: 1No. 10x4mm exposed and fitted centrally in the leaf or frame reveal.

HARDWARE PROTECTION: See section 12.

Halspan Authorised Document Valid Only When Submitted With Permission Schedule

Maximum Door Leaf Size

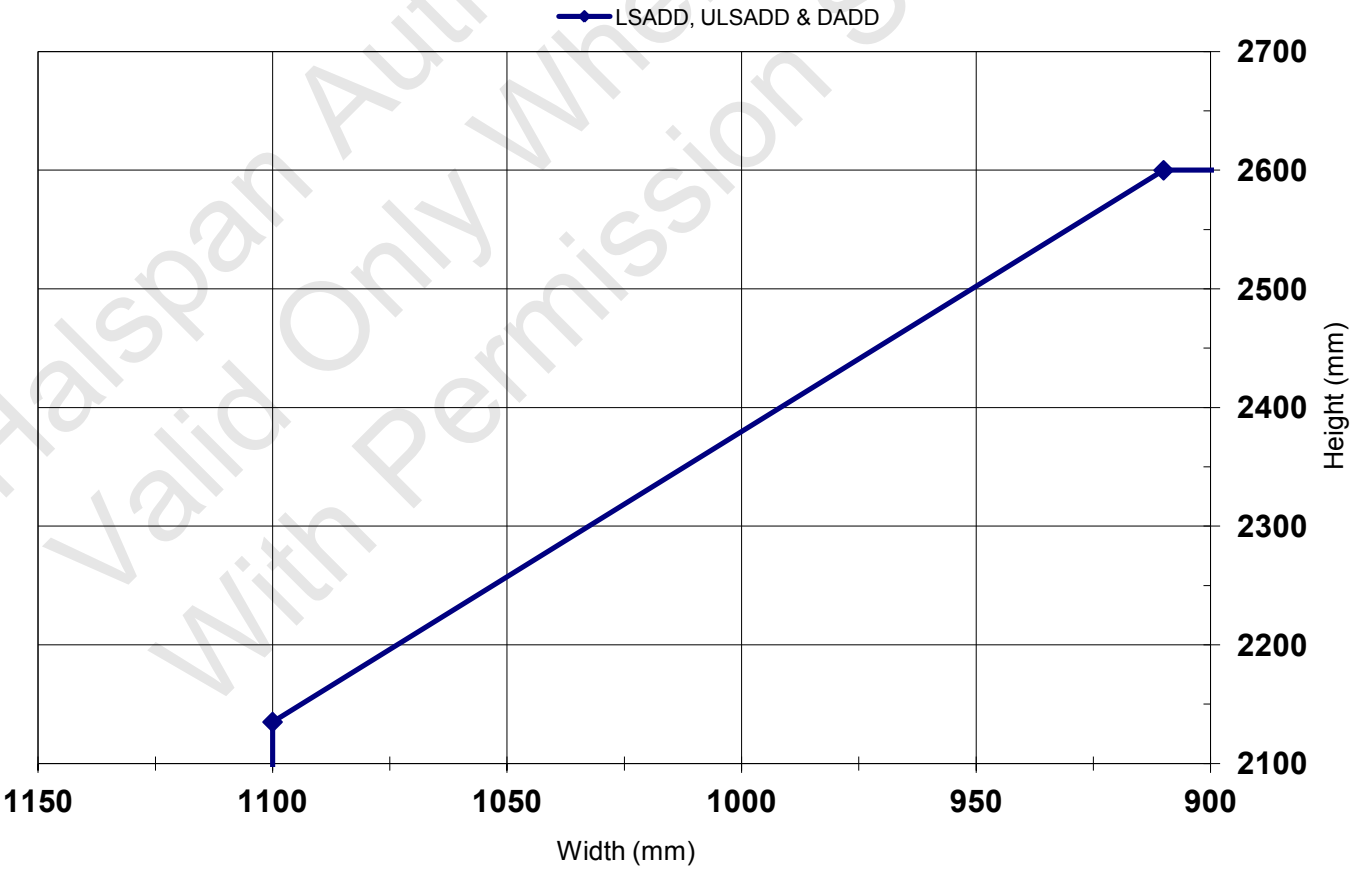

Halspan® 30 Optima Doorsets – 30 Minutes Fire Resistance

Latched & Unlatched, Single & Double Acting, Double Doorsets + Overpanel

	Configuration		Height (mm)		Width (mm)
Leaf Sizes	LSADD+OP, ULSADD+OP & DADD+OP	From:	2135	x	1040
		To:	2440	x	915
Maximum Overpanel Height (mm)			1500		
Glazing		Max. Glazed Area	1.75m^2 (see section 7 for details)		
		Approved Systems	See section 7 and Appendix C		
Frame Specification (see section 8)		Material	Softwood	Hardwood	MDF
		Min. Section (mm)	70 x 28	70 x 22	70 x 30
		Min. Density(kg/m^3)	450	640	700

INTUMESCENT MATERIALS: PVC encased Palusol 100, Type 617, Therm-A-Seal, Pyroplex or Halspan® Type SLS

HEAD:
Square: 1No. 15x4mm exposed and fitted centrally in the leaf or bottom of the overpanel. Leaves over 2400mm high, increase to 1No. 20x4mm.
Rebated: 2No. 15x4mm exposed with one seal fitted centrally in the rebate of the leaves and one seal fitted centrally in the bottom of the overpanel rebate.

MEETING EDGES:
Square: 2No. 10x4mm exposed with each seal fitted centrally in both leaf edges, or 2No. 10x4mm exposed and fitted 5mm either side of the centreline in one leaf edge only.
Rebated: 2No. 15x4mm exposed with each seal fitted centrally in the rebate of each leaf.

JAMBS: 1No. 10x4mm exposed and fitted centrally in the leaf or frame reveal.

HARDWARE PROTECTION: See section 12.

Halspan Authorised Document Valid Only When Submitted With Permission Schedule

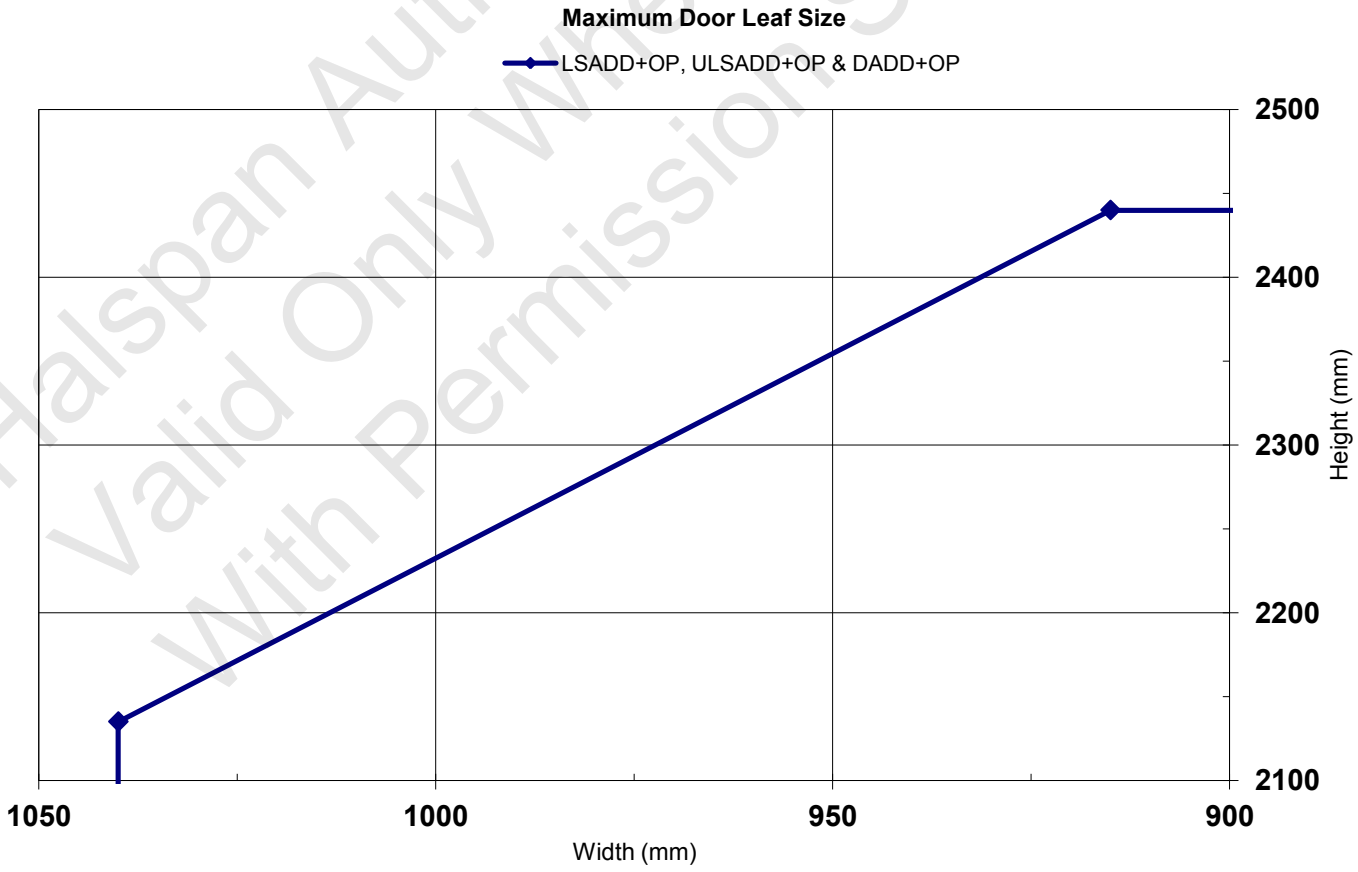

Halspan® 30 Optima Hollow Steel Frame Doorsets – 30 Minutes Fire Resistance

Latched & Unlatched, Single & Double Acting, Single Doorsets

	Configuration		Height (mm)		Width (mm)
Leaf Sizes	LSASD	From:	2040	x	1066
		To:	2598	x	826
	ULSASD & DASD	From:	2040	x	1041
		To:	2548	x	826
Maximum Overpanel Height (mm)		-	N/A		
Glazing		Max. Glazed Area	1.75m^2 (see section 7 for details)		
		Approved Systems	See section 7 and Appendix C		
Frame specification		Material	Mild or stainless steel – See Appendix A		
		Min. Section (mm)	100 x 20		

INTUMESCENT MATERIALS:

HEAD: H30 (details in confidence on file at BM TRADA).

JAMBS: H30 (details in confidence on file at BM TRADA).

HARDWARE PROTECTION: See section 12.

Halspan Authorised Document Valid Only When Submitted With Permission Schedule

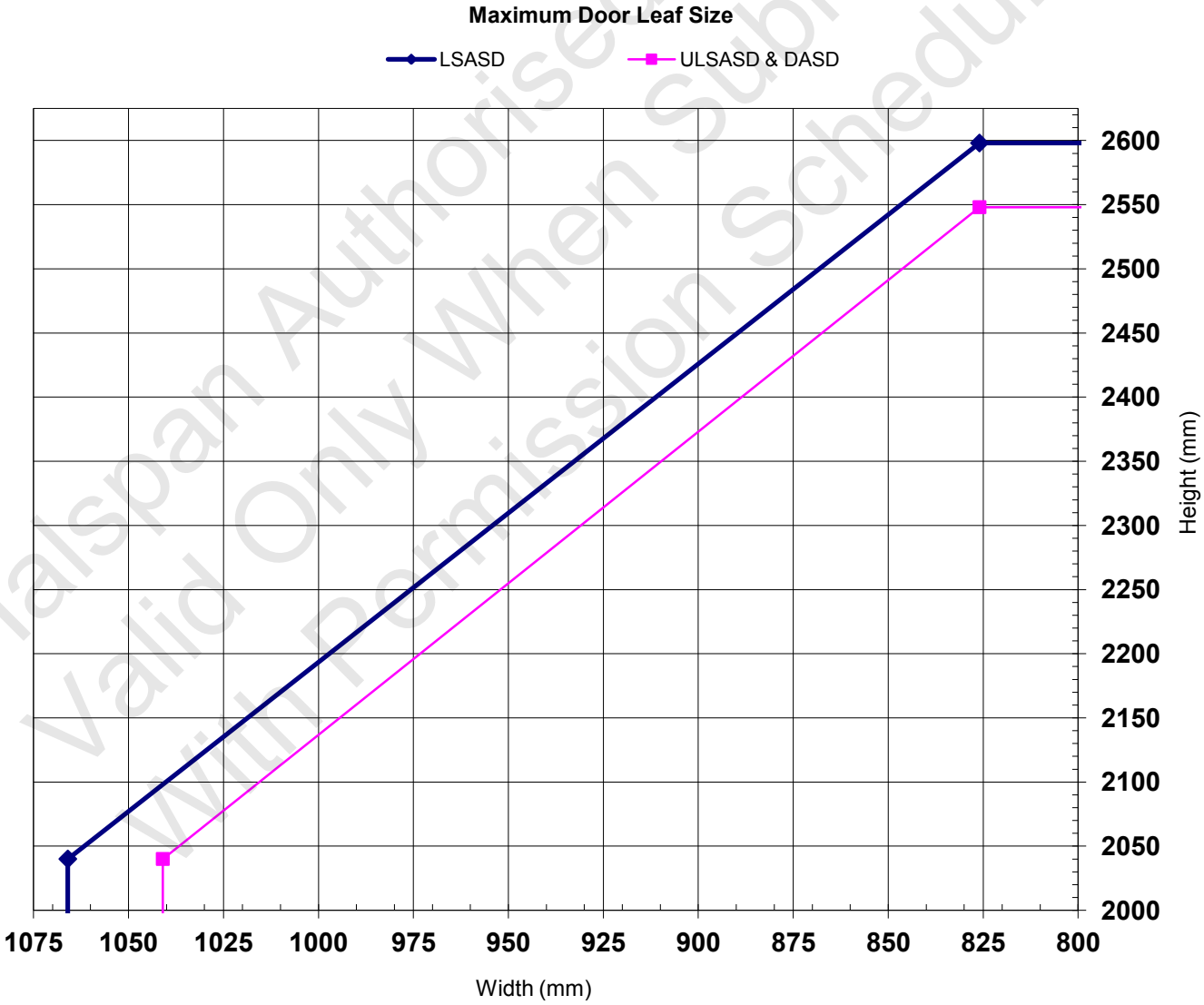

Halspan® 30 Optima Hollow Steel Frame Doorsets – 30 Minutes Fire Resistance

Latched & Unlatched, Single & Double Acting, Single Doorsets + Overpanel

	Configuration		Height (mm)		Width (mm)
Leaf Sizes	LSASD+OP	From:	2040	x	901
		To:	2190	x	826
	ULSASD+OP & DASD+OP	From:	2040	x	876
		To:	2140	x	826
Maximum Overpanel Height (mm)			500		
Glazing		Max. Glazed Area	1.75m^2 (see section 7 for details)		
		Approved Systems	See section 7 and Appendix C		
Frame Specification		Material:	Mild or stainless steel – see Appendix A		
		Min. Section (mm)	100 x 20		

INTUMESCENT MATERIALS: PVC encased Halspan® Type SLS

HEAD:
Square: 1No. 20x4mm exposed and fitted centrally in the leaf bottom of the overpanel.
Rebated: 2No. 10x4mm exposed with one seal fitted centrally in the rebate of the leaf and one seal fitted centrally in the bottom of the overpanel rebate.

JAMBS & OVERPANEL: H30 (details in confidence on file at BM TRADA).

HARDWARE PROTECTION: See section 12.

Halspan Authorised Document Valid Only When Submitted With Permission Schedule

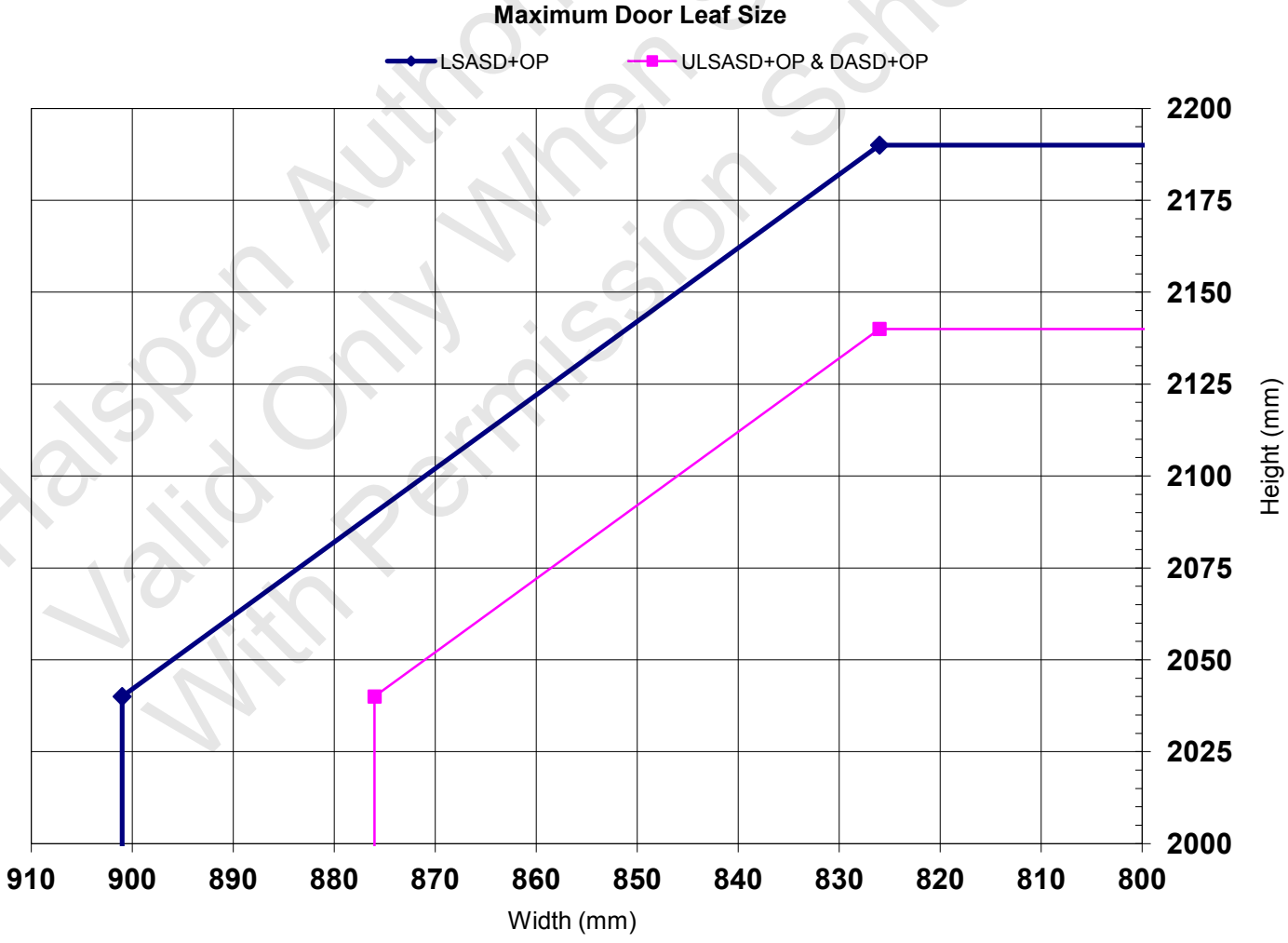

Halspan® 30 Optima Hollow Steel Frame Doorsets – 30 Minutes Fire Resistance

Latched & Unlatched, Single & Double Acting, Double Doorsets

	Configuration		Height (mm)		Width (mm)
Leaf Sizes	LSADD	From:	2040	x	1016
		To:	2498	x	826
	ULSADD & DADD	From:	2040	x	991
		To:	2448	x	826
Maximum Overpanel Height (mm)		-	N/A		
Glazing		Max. Glazed Area	1.75m^2 (see section 7 for details)		
		Approved Systems	See section 7 and Appendix C		
Frame Specification		Material	Mild or stainless steel – see Appendix A		
		Min. Section (mm)	100 x 20		

INTUMESCENT MATERIALS: PVC encased Halspan® Type SLS

HEAD: H30 (details in confidence on file at BM TRADA).

MEETING EDGES:
Square: 2No. 10x4mm exposed and fitted 5mm either side of the centreline in one leaf edge only.

JAMBS: H30 (details in confidence on file at BM TRADA).

HARDWARE PROTECTION: See section 12.

Maximum Door Leaf Size

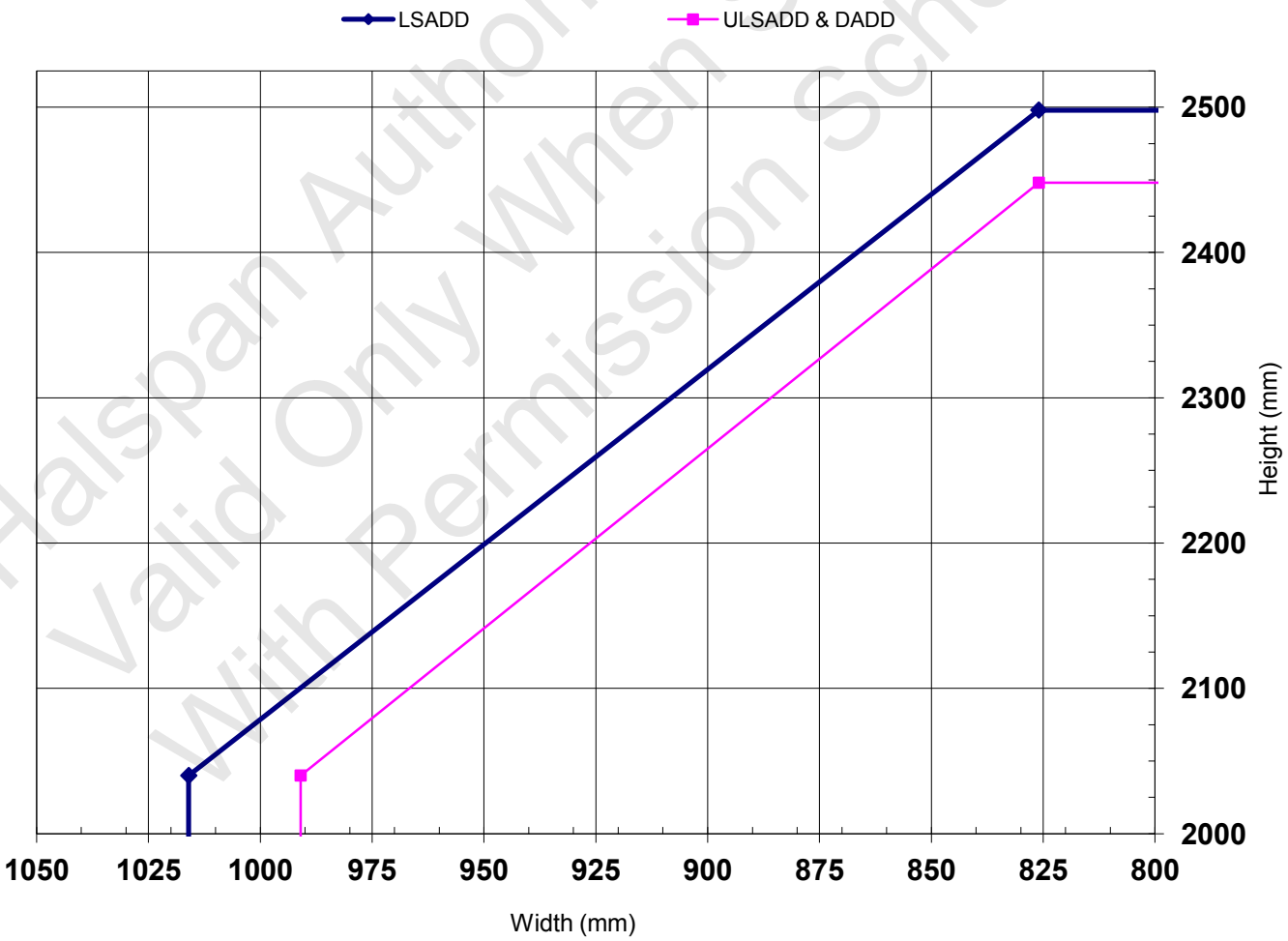

Halspan Authorised Document
Valid Only When Submitted
With Permission Schedule

Halspan® 30 Optima Hollow Steel Frame Doorsets – 30 Minutes Fire Resistance

Latched & Unlatched, Single & Double Acting, Double Doorsets + Overpanel

	Configuration		Height (mm)		Width (mm)
Leaf Sizes	LSADD+OP	From:	2040	x	851
		To:	2090	x	826
	ULSADD+OP & DADD+OP	Max:	2040	x	826
Maximum Overpanel Height (mm)			500		
Glazing		Max. Glazed Area	1.75m^2 (see section 7 for details)		
		Approved Systems	See section 7 and Appendix C		
Frame Specification		Material	Mild or stainless steel – see Appendix A		
		Min. Section (mm)	100 x 20		

INTUMESCENT MATERIALS: PVC encased Halspan® Type SLS

HEAD:
Square: 1No. 20x4mm exposed and fitted centrally in the leaf or bottom of the overpanel.
Rebated: 2No. 15x4mm exposed with one seal fitted centrally in the rebate of leaves and one seal fitted centrally in the bottom of the overpanel rebate.

MEETING EDGES:
Square: 2No. 10x4mm exposed and fitted 5mm either side of the centreline in one leaf edge only.

JAMBS & OVERPANEL: H30 (details in confidence on file at BM TRADA).

HARDWARE PROTECTION: See section 12.

Halspan Authorised Document Valid Only When Submitted With Permission Schedule

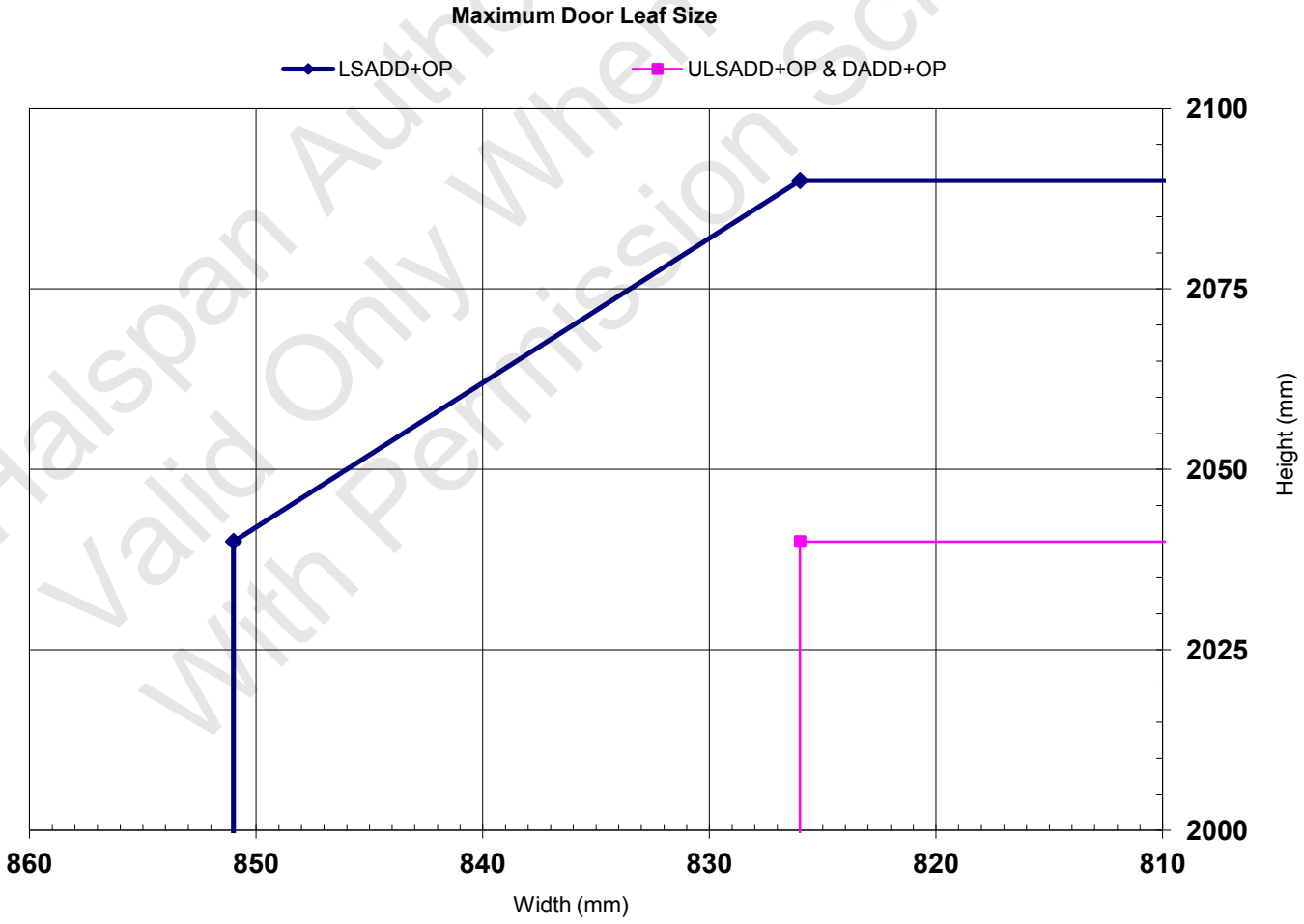

Halspan® 30 Optima Backfilled Steel Frame Doorsets – 30 Minutes Fire Resistance

Latched & Unlatched, Single & Double Acting, Single Doorsets

	Configuration		Height (mm)		Width (mm)
Leaf Sizes	LSASD	From:	2135	x	1638
		To:	3167	x	1105
	ULSASD & DASD	From:	2135	x	1613
		To:	3117	x	1105
Maximum Overpanel Height (mm)			N/A		
Glazing		Max. Glazed Area	1.75m^2 (see section 7 for details)		
		Approved Systems	See section 7 and Appendix C		
Frame Specification		Material	Mild or stainless steel – see Appendix A		
		Backfilling	Concrete or mortar		
		Min. Section (mm)	100 x 20		

INTUMESCENT MATERIALS: PVC encased Therm-A-Seal – Intumescent Seals Ltd.

HEAD:
Square: 1No. 20x4mm exposed and fitted centrally in the leaf head. Leaves over 2300mm increase to 25x4mm. Leaves over 2600mm increase to 38x4mm.

JAMBS: 1No. 20x4mm exposed and fitted centrally in the leaf edge. Leaves over 1300mm increase to 25x4mm. Leaves over 1500mm increase to 38x4mm.

HARDWARE PROTECTION: See section 12.

Maximum Door Leaf Size

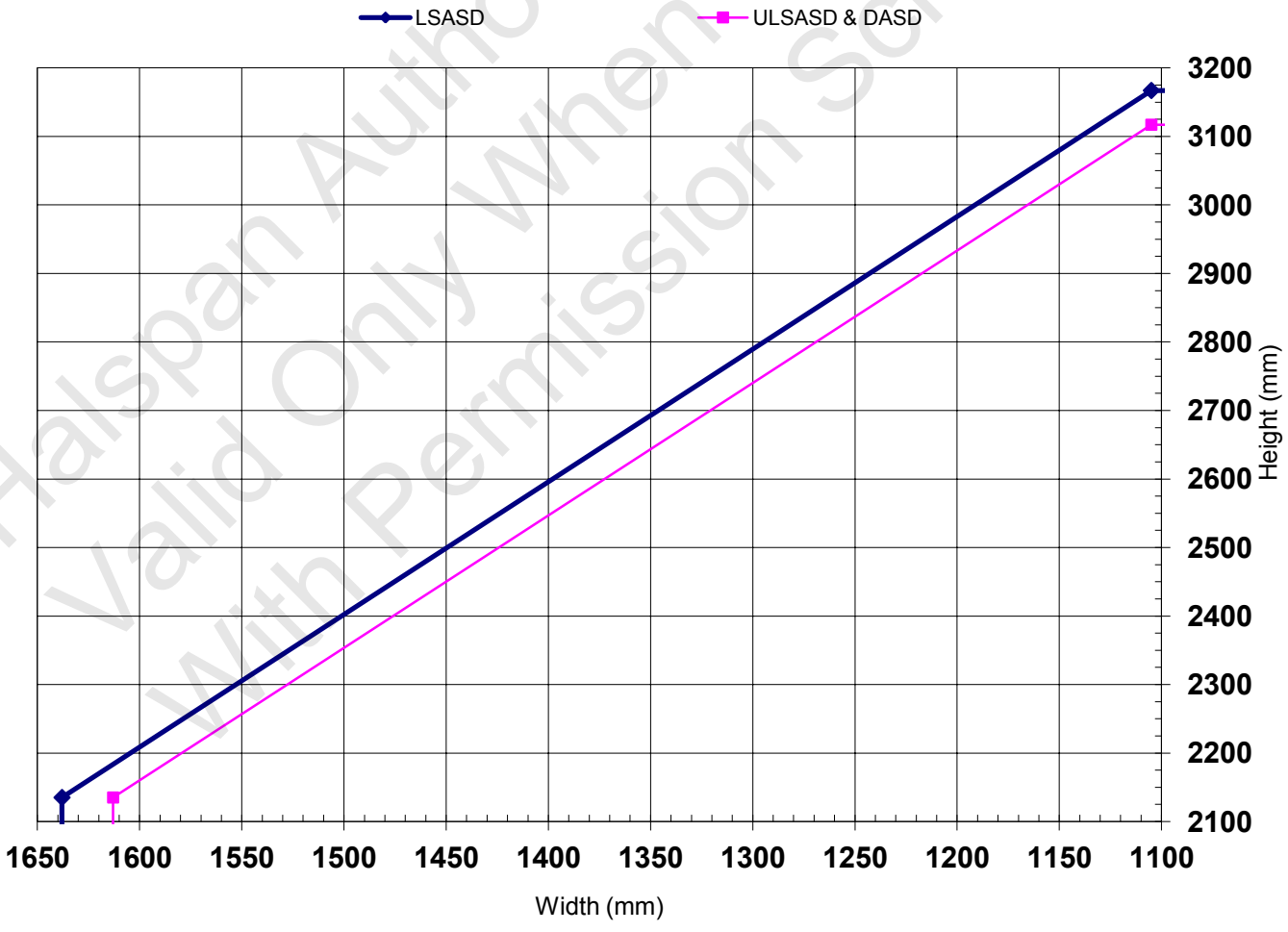

Halspan Authorised Document Valid Only When Submitted With Permission Schedule

Halspan® 30 Optima Backfilled Steel Frame Doorsets – 30 Minutes Fire Resistance

Latched & Unlatched, Single & Double Acting, Single Doorsets + Overpanel

	Configuration		Height (mm)		Width (mm)
Leaf Sizes	LSASD+OP	From:	2135	x	875
		To:	2285	x	800
	ULSASD+OP & DASD+OP	From:	2135	x	850
		To:	2235	x	800
Maximum Overpanel Height (mm)			500		
Glazing		Max. Glazed Area	1.75m^2 (see section 7 for details)		
		Approved Systems	See section 7 and Appendix C		
Frame Specification		Material	Mild or stainless steel – see Appendix A		
		Backfilling	Concrete or mortar		
		Min. Section (mm)	100 x 20		

INTUMESCENT MATERIALS: PVC encased Therm-A-Seal – Intumescent Seals Ltd.

HEAD:
Square: 1No. 20x4mm exposed and fitted centrally in the leaf or bottom of the overpanel.
Rebated: 2No. 10x4mm exposed with one seal fitted centrally in the rebate of leaf and one seal fitted centrally in the bottom of the overpanel rebate.

JAMBS & OVERPANEL: 1No. 20x4mm exposed and fitted centrally in the leaf and overpanel edge.

HARDWARE PROTECTION: See section 12.

Halspan Authorised Document Valid Only When Submitted With Permission Schedule

Maximum Door Leaf Size

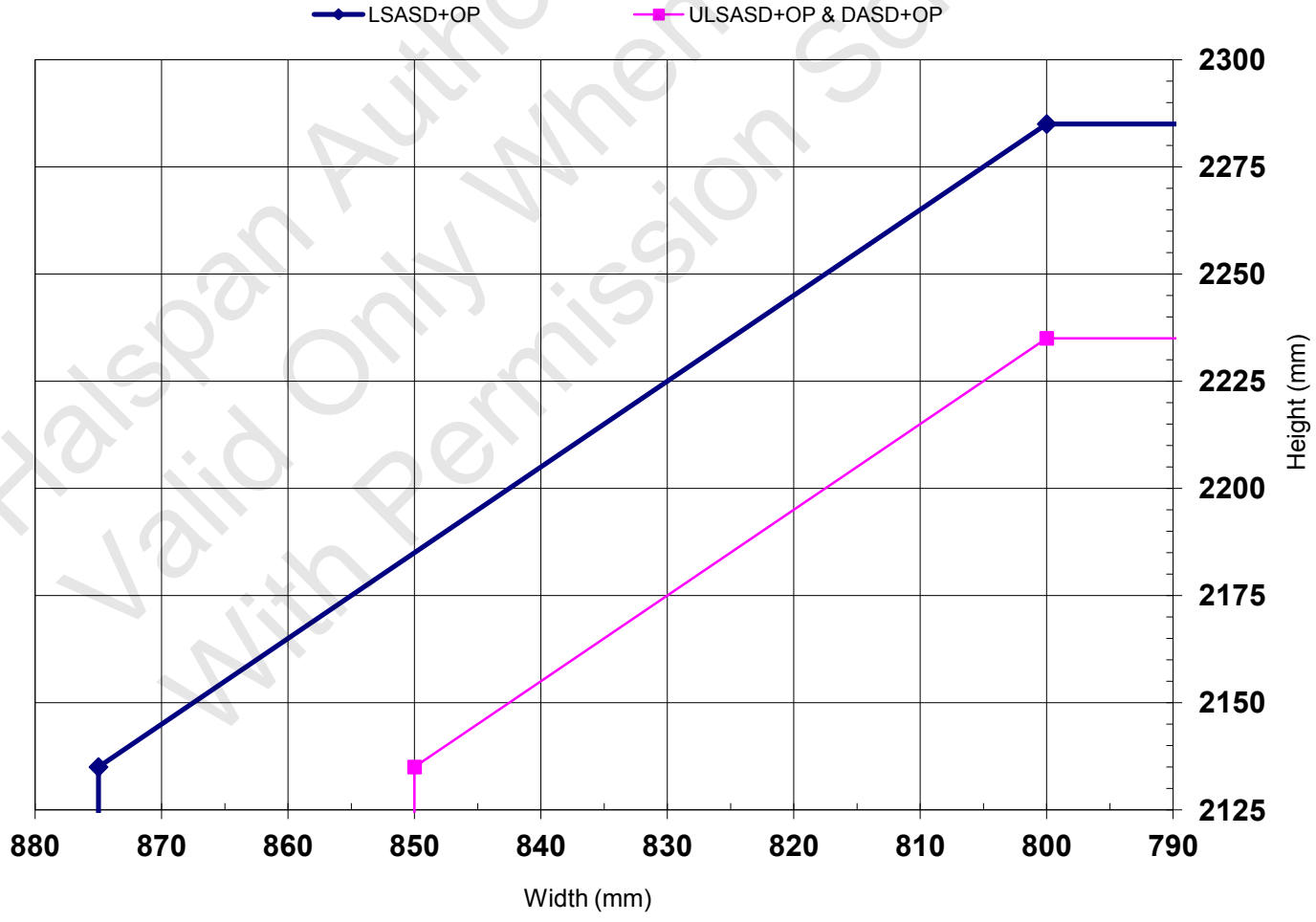

Halspan® 30 Optima Backfilled Steel Frame Doorsets – 30 Minutes Fire Resistance

Latched & Unlatched, Single & Double Acting, Double Doorsets

	Configuration		Height (mm)		Width (mm)
Leaf Sizes	LSADD	From:	2135	x	929
		To:	2462	x	800
	ULSADD & DADD	From:	2135	x	904
		To:	2412	x	800
Maximum Overpanel Height (mm)			N/A		
Glazing		Max. Glazed Area	1.75m^2 (see section 7 for details)		
		Approved Systems	See section 7 and Appendix C		
Frame Specification		Material	Mild or stainless steel – see Appendix A		
		Backfilling	Concrete or mortar		
		Min. Section (mm)	100 x 20		

INTUMESCENT MATERIALS: PVC encased Therm-A-Seal – Intumescent Seals Ltd.

HEAD: 1No. 20x4mm exposed and fitted centrally in the leaf.

MEETING EDGES:
Square: 2No. 10x4mm exposed and fitted 5mm either side of the centreline in one leaf edge only.

JAMBS: 1No. 20x4mm exposed and fitted centrally in the leaf edge.

HARDWARE PROTECTION: See section 12.

Maximum Door Leaf Size

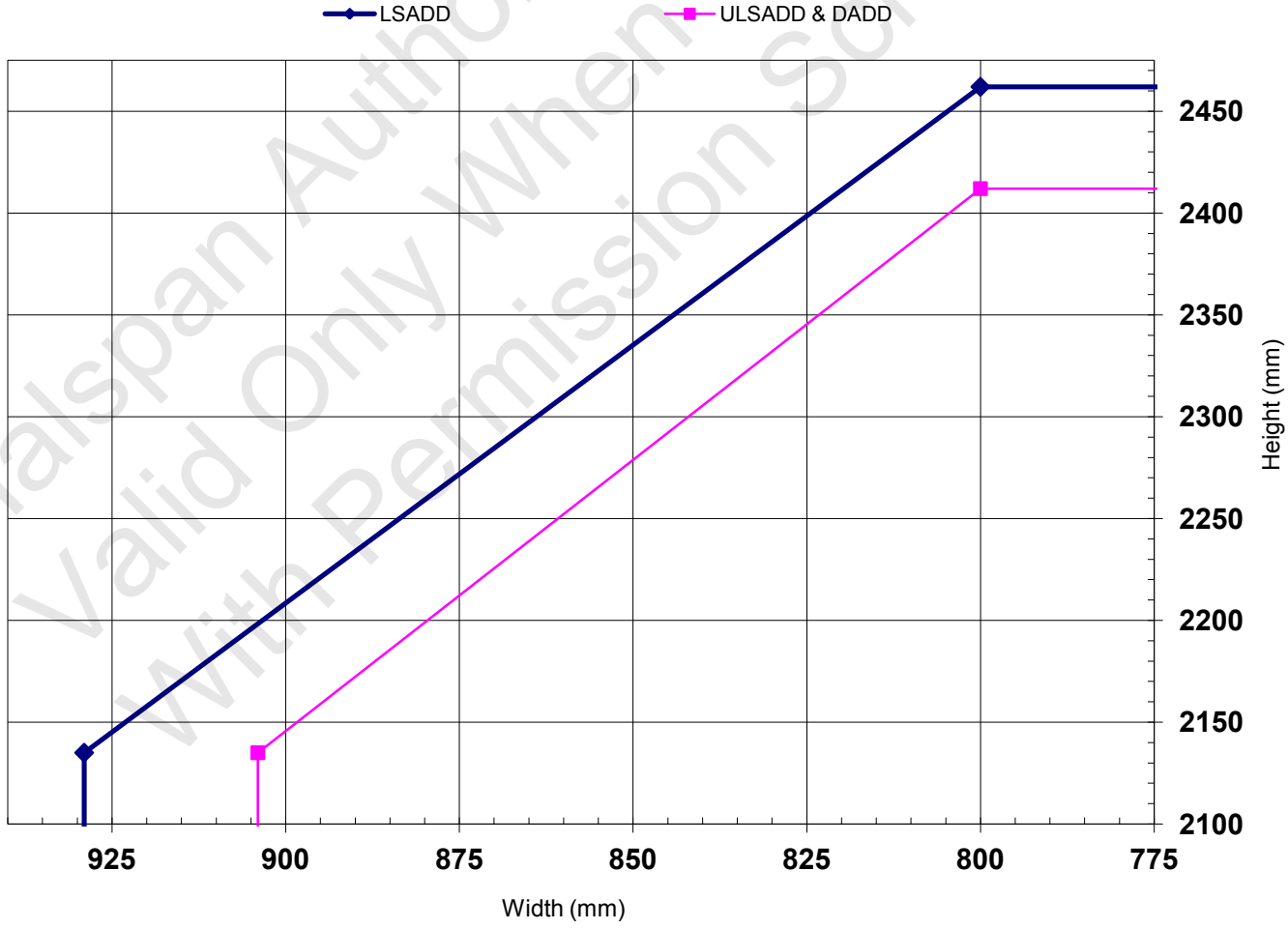

Halspan Authorised Document Valid Only When Submitted With Permission Schedule

Halspan® 30 Optima Backfilled Steel Frame Doorsets – 30 Minutes Fire Resistance

Latched & Unlatched, Single & Double Acting, Double Doorsets + Overpanel

	Configuration		Height (mm)		Width (mm)
Leaf Sizes	LSADD+OP	From:	2135	x	825
		To:	2185	x	800
	ULSADD+OP & DADD+OP	Max:	2135	x	800
Maximum Overpanel Height (mm)			500		
Glazing		Max. Glazed Area	1.75m^2 (see section 7 for details)		
		Approved Systems	See section 7 and Appendix C		
Frame Specification		Material	Mild or stainless steel – see Appendix A		
		Backfilling	Concrete or mortar		
		Min. Section (mm)	100 x 20		

INTUMESCENT MATERIALS: PVC encased Therm-A-Seal – Intumescent Seals Ltd.

HEAD:
Square: 1No. 20x4mm exposed and fitted centrally in the leaf or bottom of the overpanel.
Rebated: 2No. 15x4mm exposed with one seal fitted centrally in the rebate of leaves and one seal fitted centrally in the bottom of the overpanel rebate.

MEETING EDGES:
Square: 2No. 10x4mm exposed and fitted 5mm either side of the centreline in one leaf edge only.

JAMBS & OVERPANEL: 1No. 20x4mm exposed and fitted centrally in the leaf and overpanel edge.

HARDWARE PROTECTION: See section 12.

Maximum Door Leaf Size

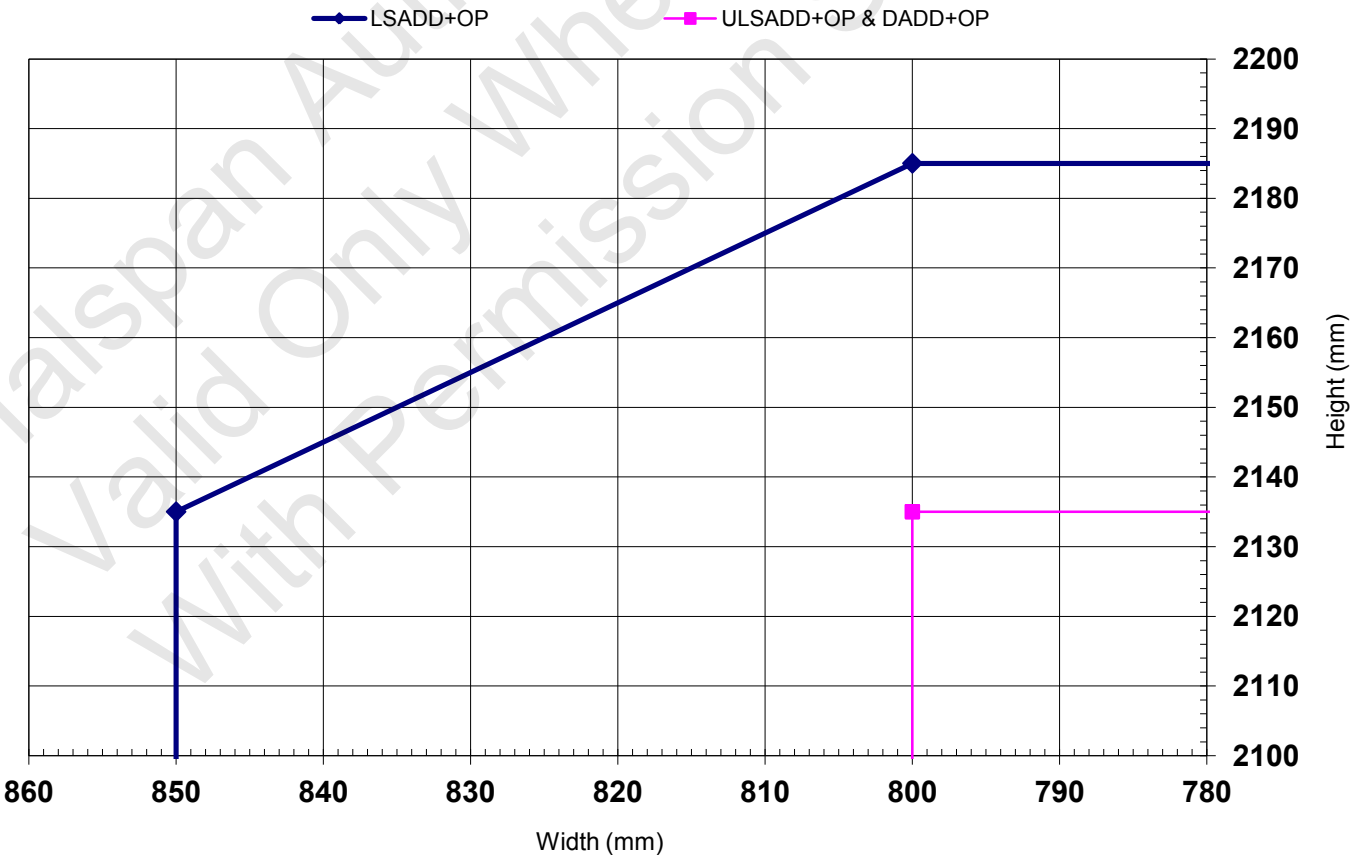

Halspan Authorised Document
Valid Only When Submitted
With Permission Schedule

Halspan® 30 Optima Aluminium Frame Doorsets – 30 Minutes Fire Resistance

Latched & Unlatched, Single Acting, Single Doorsets

	Configuration		Height (mm)		Width (mm)
Leaf Sizes	LSASD	From:	2700	x	935
		To:	2931	x	835
	ULSASD	From:	2700	x	910
		To:	2881	x	835
Maximum Overpanel Height (mm)			N/A		
Glazing		Max. Glazed Area	1.75m^2 (see section 7 for details)		
		Approved Systems	See section 7 and Appendix C		
Frame Specification		Material	Aluminium – See Appendix B		
		Min. Section (mm)	100 x 35		

INTUMESCENT MATERIALS: PVC encased Therm-A-Seal – Intumescent Seals Ltd.

HEAD: 1No. 30x4mm exposed and fitted centrally in a rebate in the leaf head.

JAMBS: 1No. 20x4mm exposed and fitted centrally in a rebate in the leaf edge.

HARDWARE PROTECTION: See section 12.

Maximum Door Leaf Size

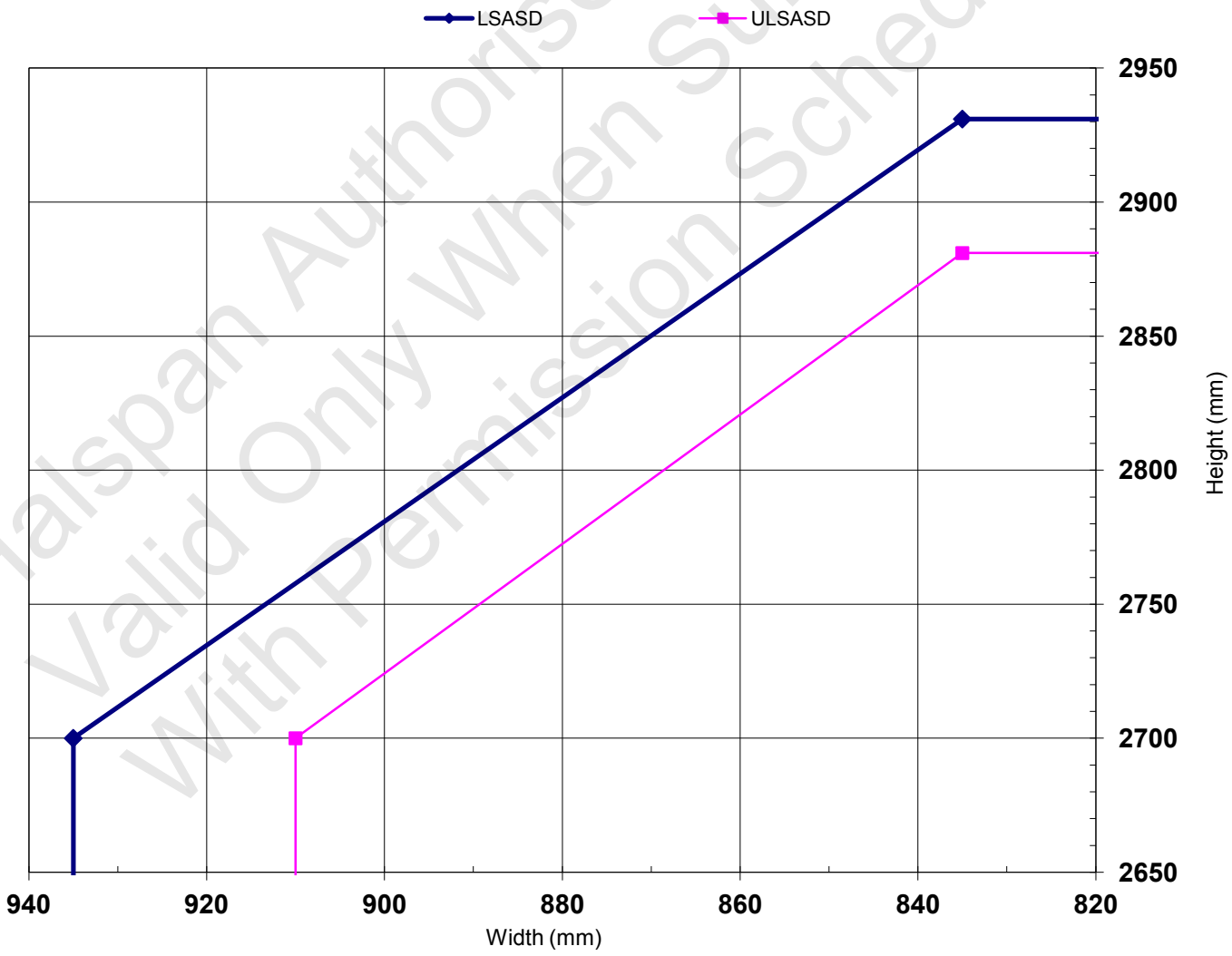

Halspan Authorised Document
Valid Only When Submitted
With Permission Schedule

Halspan® 30 Optima Aluminium Frame Doorsets – 30 Minutes Fire Resistance

Latched & Unlatched, Single Acting, Double Doorsets

	Configuration		Height (mm)		Width (mm)
Leaf Sizes	LSADD	From:	2700	x	885
		To:	2831	x	835
	ULSADD	From:	2700	x	860
		To:	2781	x	835
Maximum Overpanel Height (mm)			N/A		
Glazing		Max. Glazed Area	1.75m^2 (see section 7 for details)		
		Approved Systems	See section 7 and Appendix C		
Frame Specification		Material	Aluminium – See Appendix B		
		Min. Section (mm)	100 x 35		

INTUMESCENT MATERIALS: PVC encased Therm-A-Seal – Intumescent Seals Ltd.

HEAD: 1No. 30x4mm exposed and fitted centrally in a rebate in the leaf head or frame reveal.

MEETING EDGES:
Square: 2No. 10x4mm exposed and fitted 5mm either side of the centreline in one leaf edge only.

JAMBS: 1No. 20x4mm exposed and fitted centrally in a rebate in the leaf edge or frame reveal.

NB: Doorsets with a latch or lock must fit 1mm thick Interdens or 2mm thick Therm-A-Strip under the forend & keep.

HARDWARE PROTECTION: See section 12.

Halspan Authorised Document
Valid Only When Submitted
With Permission Schedule

Maximum Door Leaf Size

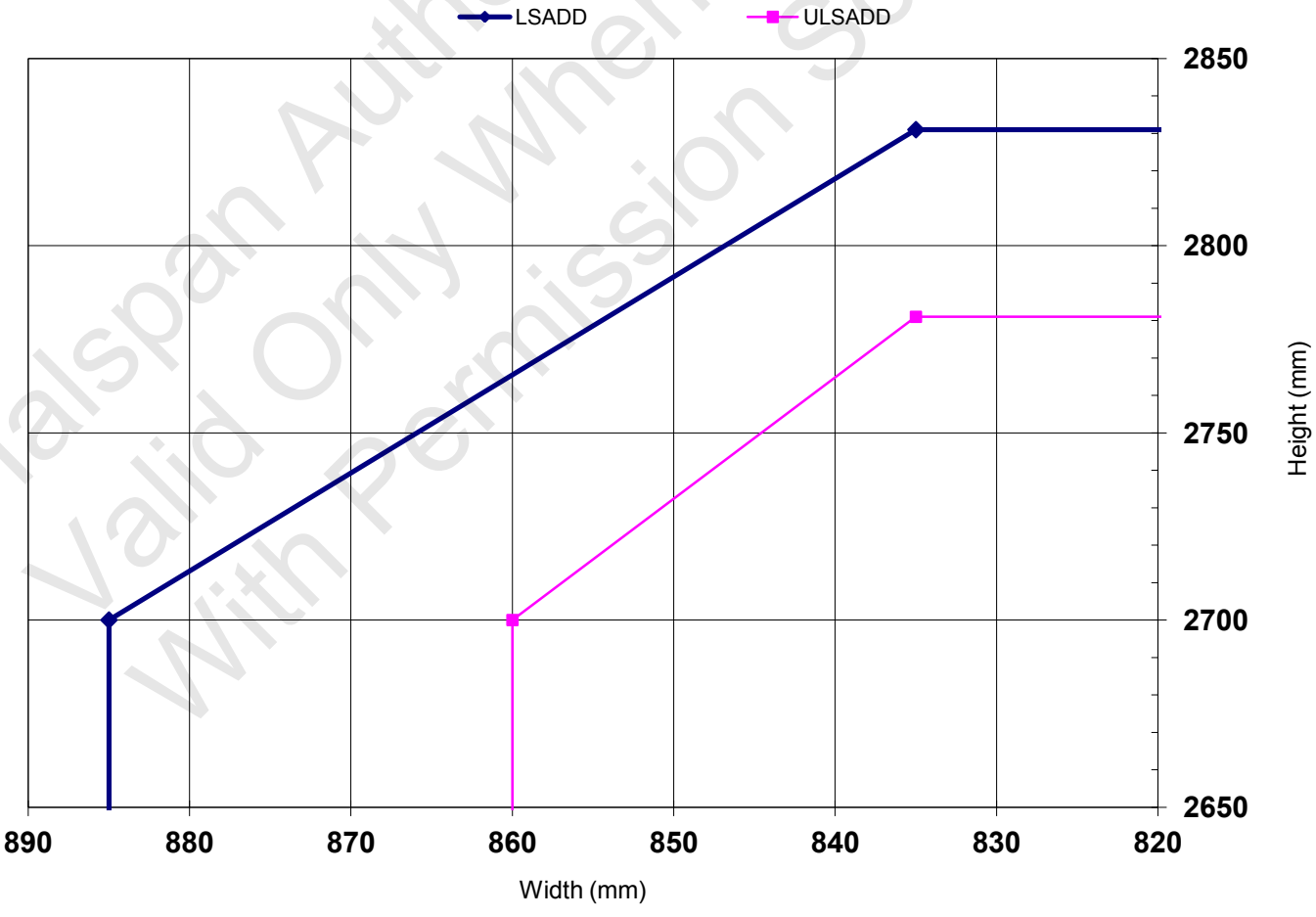

BMTRADA

Hash Authorised Document
Valid Only When Submitted
With Permission Schedule

BM TRADA provides independent certification, testing, inspection, training and technical services around the world. We help customers large and small to prove their business and product credentials and to improve performance and compliance. With an international presence across many industry sectors, we offer a special focus and long history of technical excellence in supply chain certification, product certification and testing, and technical services to the timber, building, fire and furniture industries.

testing@bmtrada.com

bmtradagroup.com

+44 (0) 1494 569800

CHILTERN INTERNATIONAL FIRE LTD CHILTERN HOUSE, STOCKING LANE, HUGHENDEN VALLEY, HIGH WYCOMBE, BUCKS, HP14 4ND, UK

REGISTERED IN ENGLAND NO. 3125010